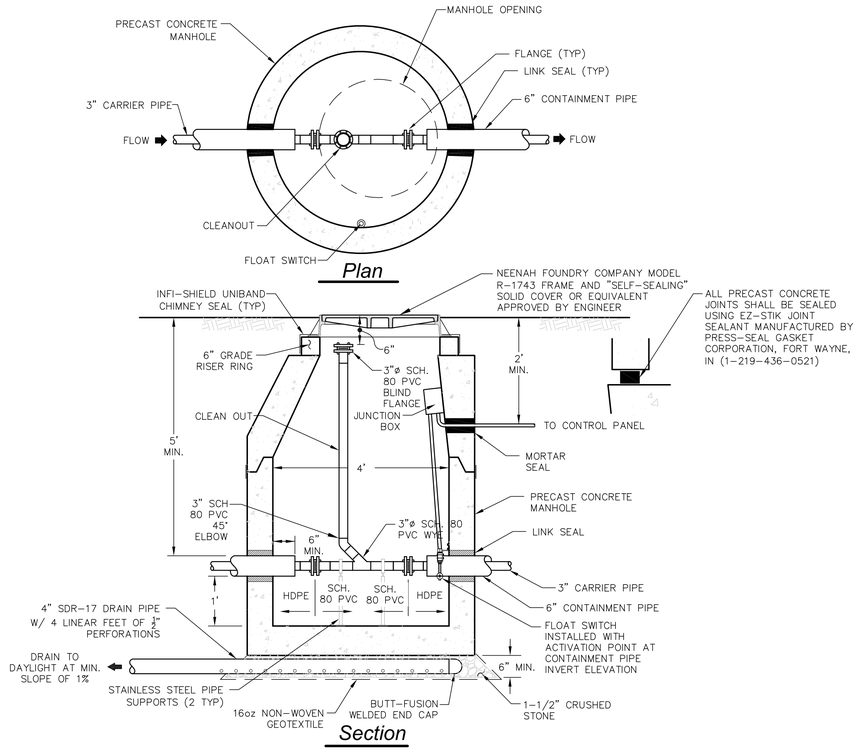

Force Main Leak Detection Chamber
Not to Scale

36

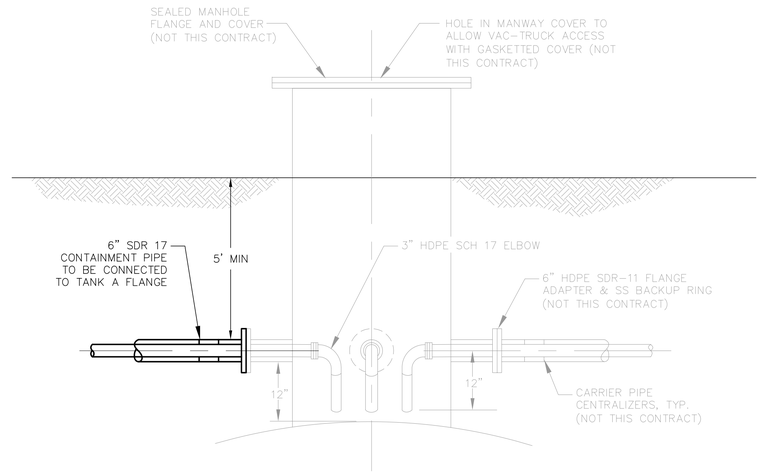

Tank A Connection
Not to Scale

37

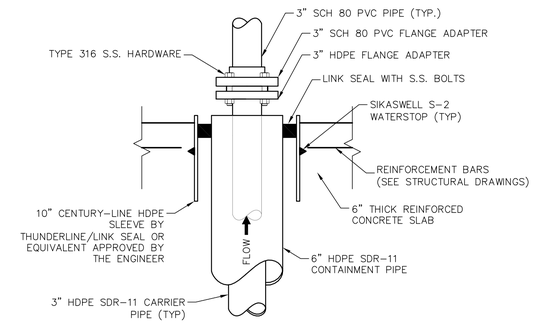

Leachate Force Main Slab Penetration
Not to Scale

38

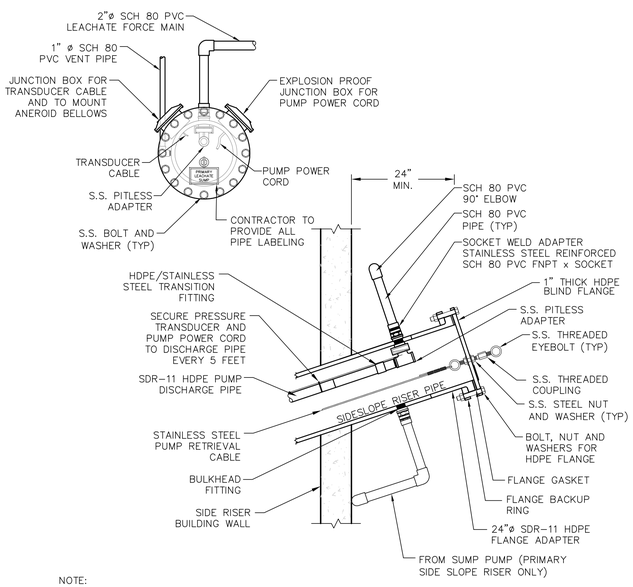

NOTE:

1. PITLESS ADAPTER SHALL BE INSTALLED IN RISER PIPES 12 INCHES FROM CONCRETE WALL.

2. CONTRACTOR SHALL PROVIDE AN ENGRAVED STAINLESS STEEL LABEL ON THE TOP OF EACH RISER THAT SHOWS THE TOTAL LENGTH OF THE SIDE RISER PIPE ALONG THE INVERT.

EQUIPMENT LIST

PITLESS ADAPTER – MODEL NW STAINLESS STEEL DISCHARGE ADAPTER, EPG COMPANIES, INC., MAPLE GROVE, MN, (800)443-7526.

FLANGE BACKUP RING – DUCTILE IRON FLANGE BACKUP RING WITH POWDERCOAT EPOXY COATING.

BOLTS FOR FLANGE (16 PER FLANGE)– GRADE 8 PLAIN STEEL HEX-HEAD CAP SCREWS, 1-1/8"-7 STANDARD THREAD, 6-1/2" LONG.

HEX NUTS FOR FLANGE (16 PER FLANGE)–PLAIN STEEL HEX FULL NUT, 1-1/8"-7.

WASHERS FOR FLANGE (32 PER FLANGE)– PLAIN STEEL SAE STANDARD FLAT WASHER, 1-1/8" SCREW SIZE, 2-1/4" O.D., 9/64" THICK.

FLANGE GASKETS – $\frac{1}{8}$-INCH THICK VITON FULL FACE FLANGE GASKET.

PUMP CORD JUNCTION BOX – EXPLOSION PROOF JUNCTION BOX. 4" x 4" MINIMUM INTERIOR DIMENSIONS.

PROVIDE PASS-THROUGH SINGLE TIER TERMINAL BLOCKS FOR PUMP POWER AND TRANSDUCER CONDUCTORS. PROVIDE LABELS FOR EACH TERMINAL.

EXTEND PRESSURE TRANSDUCER CABLE VENT TUBE TO ANEROID BELLOWS MOUNTED IN THE TRANSDUCER CABLE JUNCTION BOX ON THE WALL OF THE SIDESLOPE RISER PIPE.

Bulkhead Piping Detail
Not to Scale

39

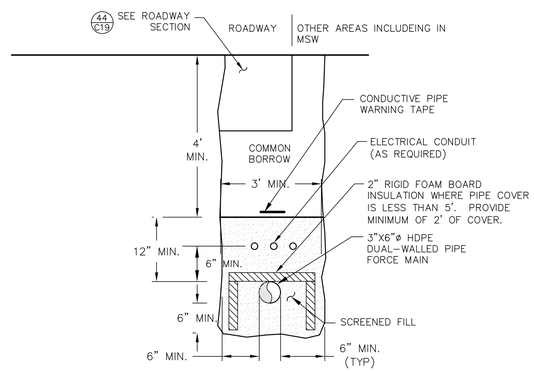

NOTE: SEE ELECTRICAL DRAWINGS AND SPECIFICATIONS FOR NUMBER AND SIZE OF ELECTRICAL CONDUIT PROPOSED. INSTALL ONE SPARE CONDUIT OF EACH SIZE WITH A PULL STRING INSTALLED.

Typical Leachate Force Main Trench
Not to Scale

40

CMA ENGINEERS
CIVIL/ENVIRONMENTAL ENGINEERS

35 Bow Street
Portsmouth, New Hampshire
03801-3819
Phone: 603/431-6196
Fax: 603/431-5376

Lafayette Center
Storer Street Building, Suite 208
Kennebunk, Maine 04043
Phone: 207/985-8717
Fax: 207/985-5520

E-mail: info@cmaengineers.com

North Country Environmental Services, Inc.
Bethlehem, NH

project:
Stage IV Phase II
Type IB Permit Application

title:
Leachate Pump Station & Force Main Details

Scale As Shown

no.	comment	date	by

designed by:	date:
JSM/RJG	February 2009
drawn by: MAM/DAA	project no: 656.05
approved by: RJG/WAS	sheet no: C-17

F:\CADD\PROJECTS\656\656.05\dwg\Preliminary Jan09\65605pPumpStation.dwg 1/14/2009 4:16:48 PM EST