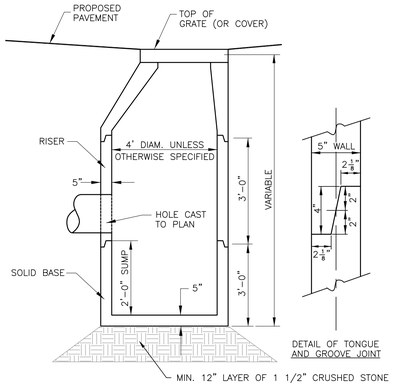

NOTES:

1. Horizontal joints between sections of precast concrete barrels shall be of a type approved by the Engineer, which shall, in general, depend for watertightness upon an elastomeric or mastic-like gasket.

2. Pipe to manhole joints shall be only as approved by the Engineer and in general will depend for watertightness upon either an approved non-shrinking mortar or elastomeric sealant.

3. For bitumastic type joints, the amount of sealant shall be sufficient to fill at least 75% of the joint cavity. Approved bitumastic sealants include RAM-NEK, Kent seal No. 2, EZ or equal.

4. All structures shall meet H-20 Loading.

5. The tongue or the groove of the joint of the wall. shall contain one line of circumferential reinforcement equal to 0.12 sq.in. per linear foot.

6. Eccentric cones shall be used when depth to crown of shallowest pipe exceeds 30". Risers of 12", 3' and 4' can be used to reach the desired depth.

7. Catch basin grates to be NHDOT Type B gray iron and all drain manhole covers shall be labeled "DRAIN"

Catch Basin / Manhole Detail

Not to Scale

50

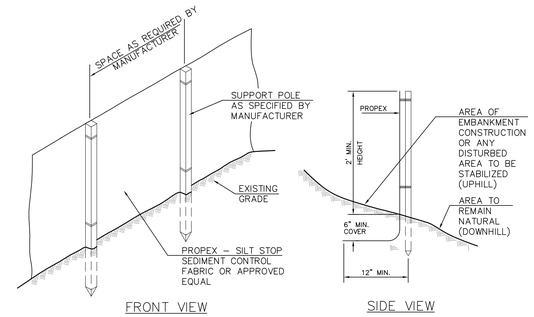

NOTE:
AT A MINIMUM, SILT FENCE IS TO BE INSTALLED TO PROTECT WETLAND AREAS, WATERWAYS, EXISTING AND PROPOSED DRAINAGE FEATURES, SLOPES, LAWNS AND PLANTINGS ADJACENT TO THE WORK.

Silt Fence

Not to Scale

51

NOTES:

1. PLACE CONTINUOUS LENGTH OF SILT FENCE ACROSS DRAINAGE WAY.

2. PLACE 3/4" CRUSHED STONE TO WITHIN 6" OF TOP OF DRAINAGE WAY.

3. FOR ACTIVE DRAINAGE OUTFLOW CHECK DAMS SHALL BE PLACED IN SERIES ALONG FLOW LINE TO RETAIN SEDIMENTS.

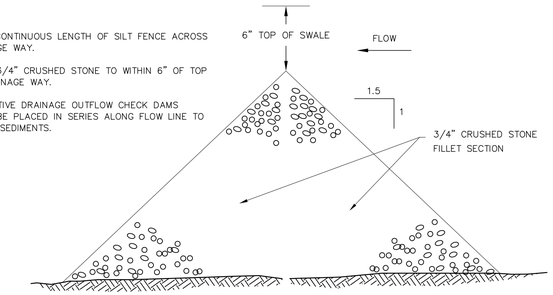

Stone Check Dam

Not to Scale

52

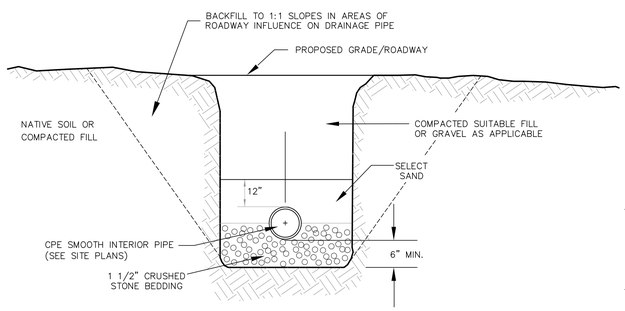

Typical Drainage Pipe Bedding

Not to Scale

53

DIAMETER D	A	B	C	E	F	G	H	I	J
15"	23"	54"	24"	20"	22"	7"	43"	36"	36"
18"	25"	54"	25"	24"	22"	7"	48"	42"	38"
24"	27"	60"	26"	28"	23"	7"	53"	47"	41"
30"	32"	66"	27"	34"	23"	6"	59"	53"	45"
36"	38"	72"	29"	42"	24"	6"	65"	59"	48"

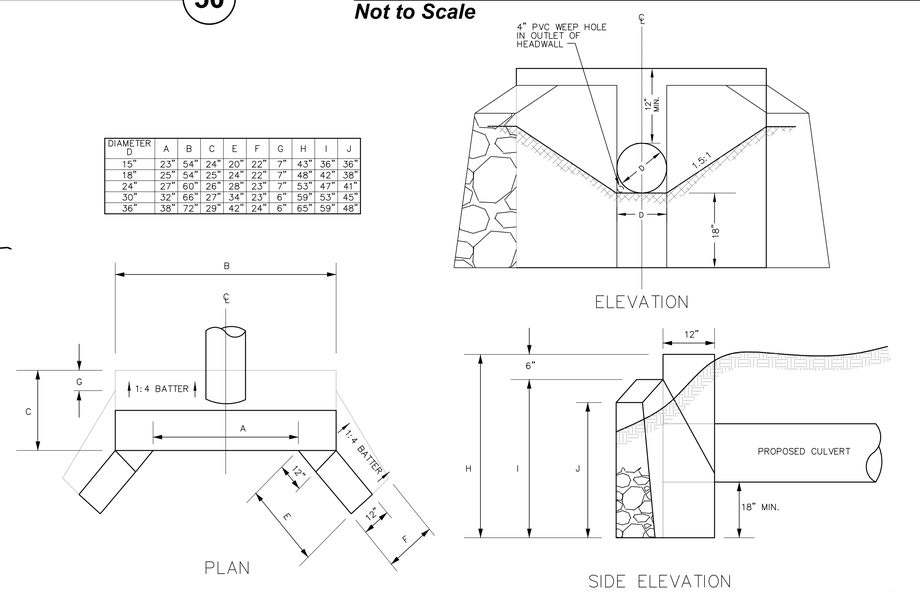

Masonry Rubble Headwall

Not to Scale

54

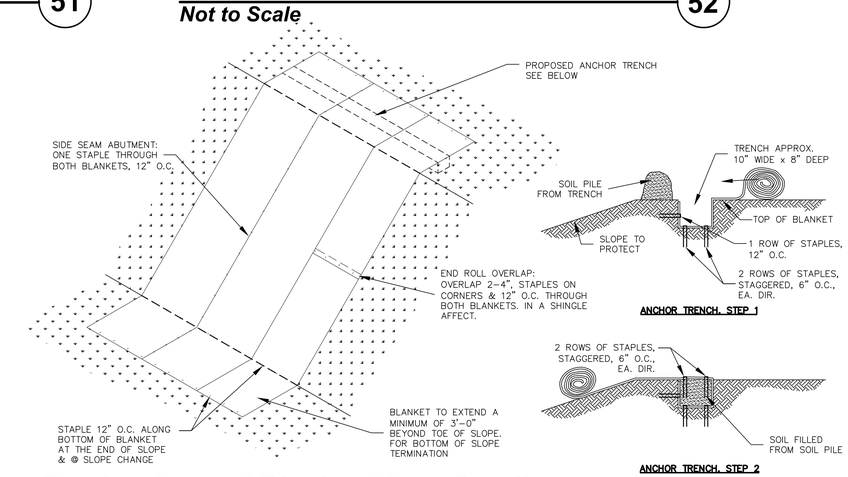

Erosion Control Blanket Slope Detail

Not to Scale

55

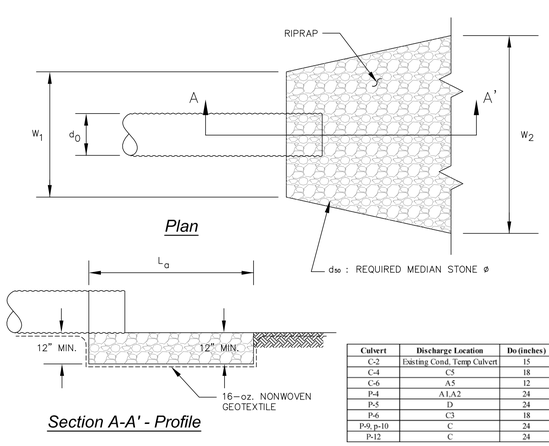

NOTE:
1. IF A PROPOSED CULVERT IS DISCHARGING INTO A STONE LINED SWALE CONSISTING OF ADEQUATE STONE, NO CULVERT APRON IS NECESSARY

Culvert	Discharge Location	Do (inches)	L_a (ft)	w_1 (ft)	w_2 (ft)	d_{50} (inches)	Material Type
C-2	Existing Cond, Temp Culvert	15	24	4	28	5	NHDOT Type B Stone
C-4	C5	18	19	5	23	3	NHDOT Type C Stone
C-6	A5	12	36	3	39	9	NHDOT Type B Stone
P-4	A1,A2	24	18	6	24	3	NHDOT Type C Stone
P-5	D	24	36	6	42	8	NHDOT Type B Stone
P-6	C3	18	37	5	42	8	NHDOT Type B Stone
P-9, p-10	C	24	30	6	36	8	NHDOT Type B Stone
P-12	C	24	26	6	32	5	NHDOT Type B Stone

Typical Culvert Apron

Not to Scale

56

no.	comment	date	by

CMA ENGINEERS
CIVIL/ENVIRONMENTAL ENGINEERS

35 Bow Street
Portsmouth, New Hampshire
03801-3819
Phone: 603/431-6196
Fax: 603/431-5376

Lafayette Center
Storer Street Building, Suite 208
Kennebunk, Maine 04043
Phone: 207/985-8717
Fax: 207/985-5520

E-mail: info@cmaengineers.com

North Country
Environmental Services, Inc.
Bethlehem, NH

project:
Stage IV Phase II
Type IB Permit Application

title:
Stormwater Details

THE STATE OF NEW HAMPSHIRE ROBERT J. MALO NO. 9404 LICENSED PROFESSIONAL ENGINEER

designed by:	date:
JSM/RJG	February 2009
drawn by: DAA/DMO MAM/APV	project no: 656.05
approved by: RJG/WAS	sheet no: C-20