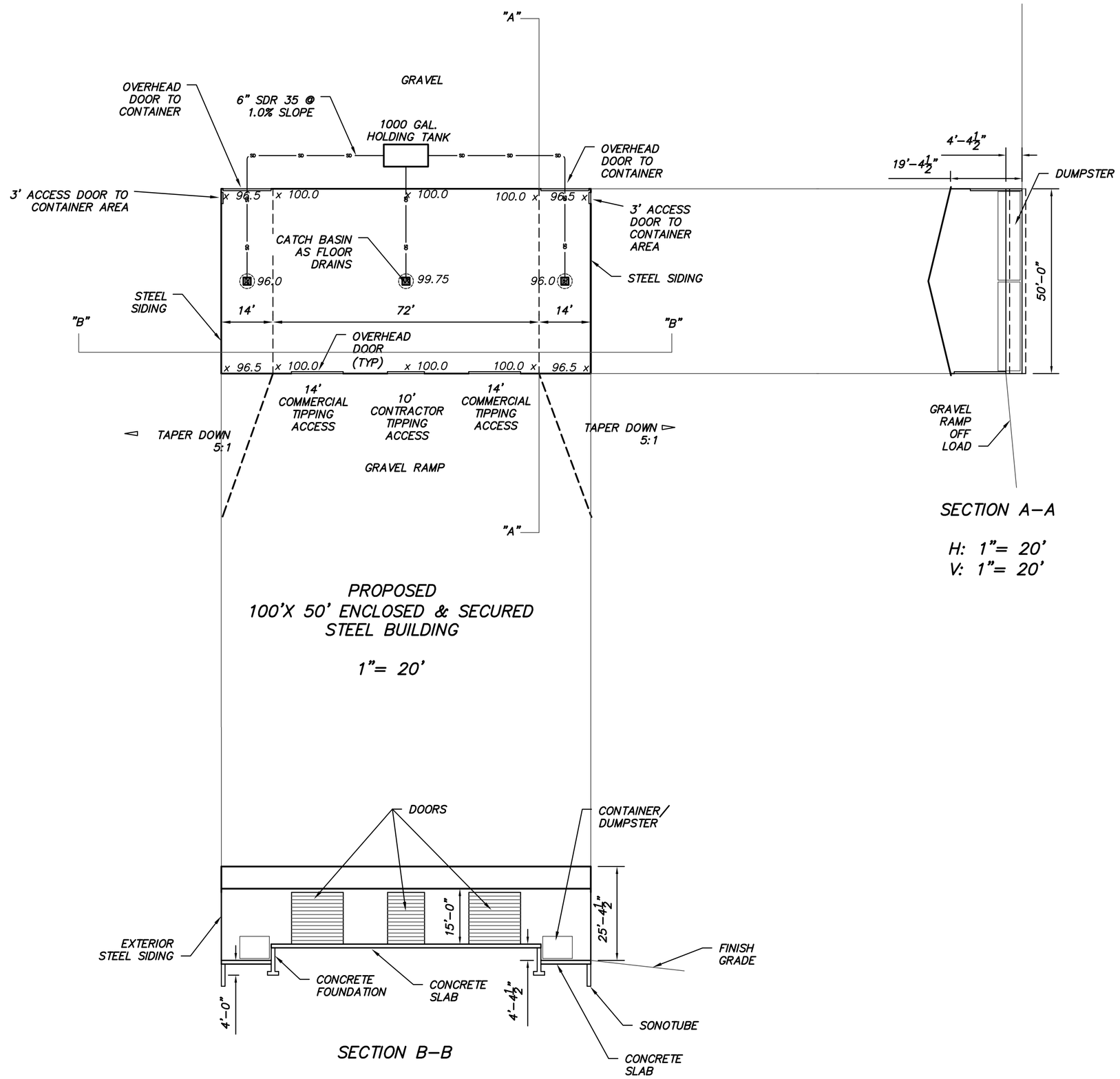

PROPOSED
100'X 50' ENCLOSED & SECURED
STEEL BUILDING

1"= 20'

SECTION A–A

H: 1"= 20'
V: 1"= 20'

SECTION B–B

H: 1"= 20'
V: 1"= 20'

BUILDING DETAIL:

SCALE AS NOTED

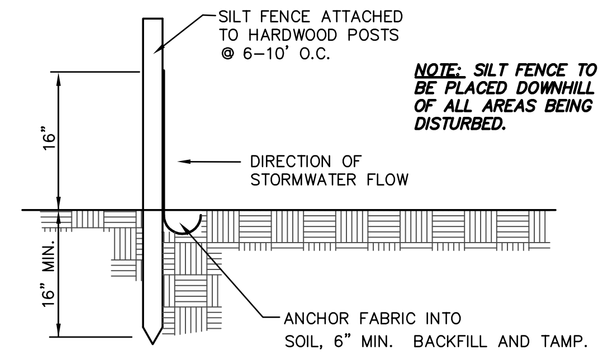

SILT FENCE

NOT TO SCALE

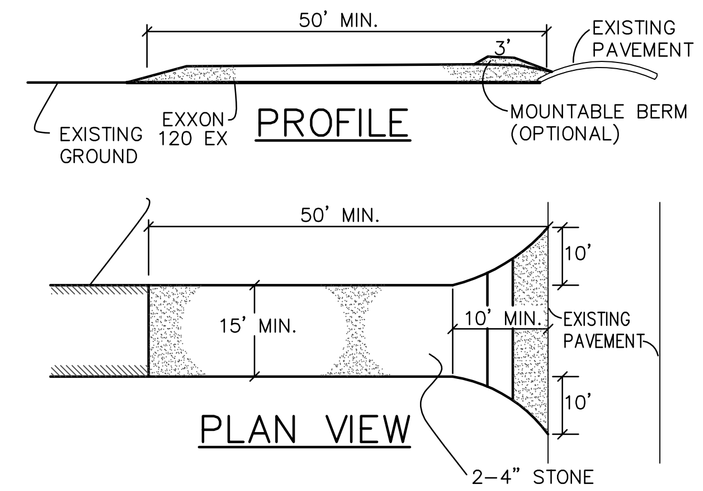

STABILIZED CONSTRUCTION ENTRANCE

NOT TO SCALE

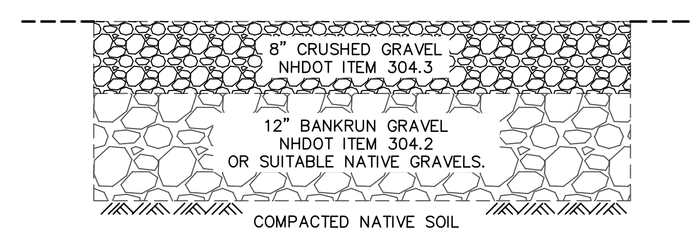

PARKING/DRIVEWAY SECTION

NOT TO SCALE

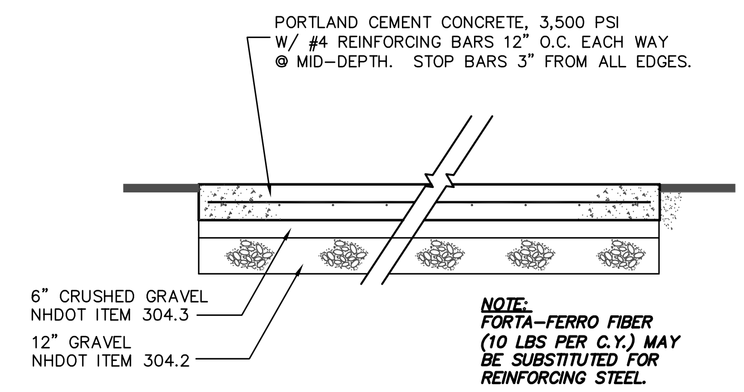

CONCRETE SLAB DETAIL

NO SCALE

PIPE MATERIAL	BEDDING	BLANKET
DUCTILE IRON	6" SAND	12" SAND
HDPE	6" SAND	12" SAND
PLASTIC	6" SAND	12" SAND
COPPER	6" SAND	12" SAND
SDR 35	6" STONE	12" SAND

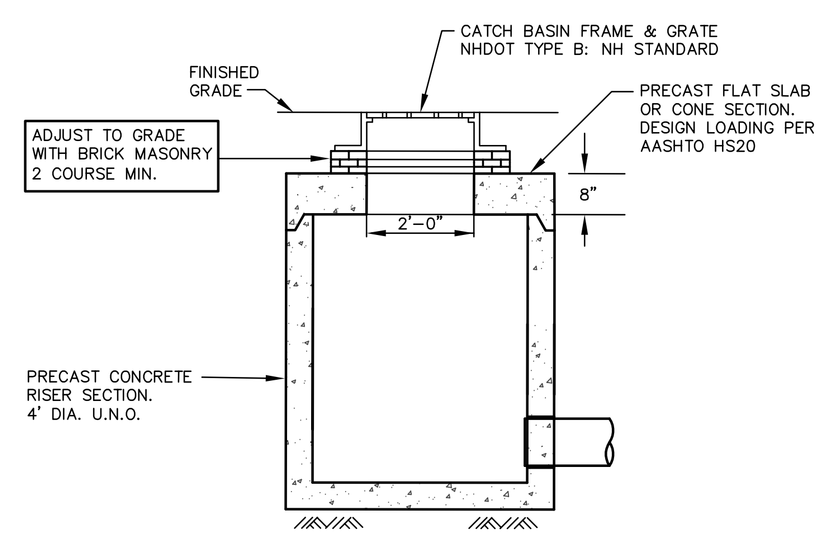

CATCH BASIN DETAIL

NOT TO SCALE

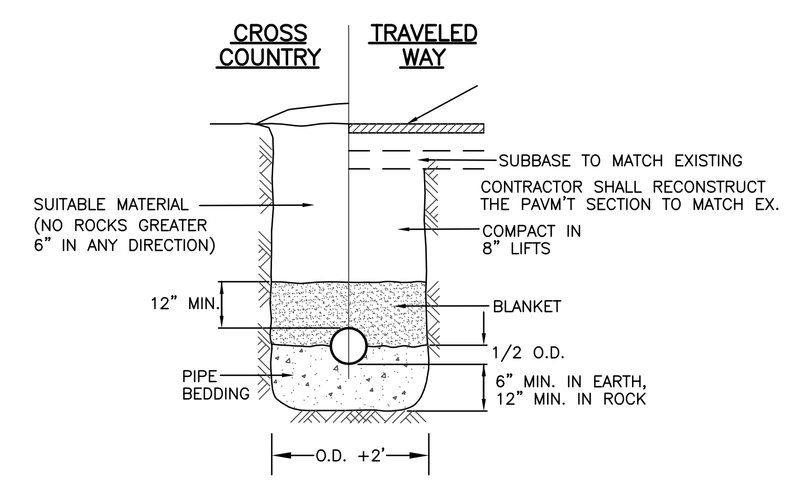

PIPE IN TRENCH DETAIL

NOT TO SCALE

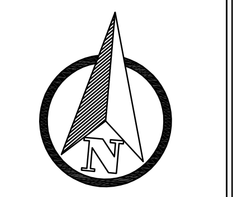

0 30' 60'

SCALE: 1"=30'

REV.	DESCRIPTION	DATE

DESIGNED BY: RJH
CHECKED BY: RH
DATE PLAN: 10/12/10
DATE SURVEY: N/A
PROJECT NO.: K1998
CAD NO.: K1998 SITE

SVE Associates

Engineering
Surveying
Landscape Architecture
Planning

47 Marlboro Street
Keene, NH 03431
Phone (603) 355–1532
Fax (603) 355–2969
website: www.sveassoc.com

© 2010

Project:
SITE PLAN FOR C&D DEBRIS RECYCLING
INDUSTRIAL PARK RD.
WALPOLE, NEW HAMPSHIRE
TAX MAP 1, LOT 10–2
INDUSTRIAL DISTRICT

For:
JEFF & JOE RUGGIERO

CONSTRUCTION DETAILS

SHEET

C-2

P:\project\K1998 Ruggiero Rubbish Removal\Dwg\K1998 SITE 2010-10-12.dwg, 12/11/2014 9:03:05 AM, CutePDF Writer