4-6. Conveyance Practices

The following Conveyance Practices are presented in this Section:

1. Detention Basin

   Note:
   Several of the Treatment Practices (e.g., stormwater treatment ponds, stormwater wetlands, infiltration basins) may serve a combined function of providing treatment and control of peak discharge rates. As such, these other BMPs will incorporate design elements applicable to Detention Basins. Therefore, the detention basin design criteria should be used as guidance in developing the designs of these other structural BMPs.

2. Stone Berm Level Spreader

3. Conveyance Swale

4. Terraced Slopes or Benching

5. Flow Splitter

6. Permanent Outlet Protection

1. DETENTION BASINS

General Description

A detention basin is an impoundment designed to temporarily store runoff and release it at a controlled rate, reducing the intensity of peak flows during storm events. Conventional detention basins are typically designed to control peak runoff rates under a range of storm conditions, and can be used to control discharges as required under the AoT Regulations and other requirements, including, but not necessarily limited to:

- Storage and peak rate control to meet Channel Protection Requirements (see Section 2-17);
- Storage and peak rate control to meet Peak Runoff Control Requirements (see Section 2-18) (10-year and 50-year frequency, 24-hour storm events);
- Storage and peak rate control to prevent flood impacts within the 100-year flood plain;
- Storage and peak rate control to meet other regulatory requirements, including local permitting standards.

Detention basins may consist of surface basins (pond-type structures) or subsurface basins (enclosed structures located below ground. Surface basins should be designed with an emergency spillway or bypass meeting applicable dam safety standards (Env-Wr 100 - 700: Dam Safety Rules). Subsurface basins should also be designed to safely bypass flows exceeding the engineered capacity of the structure.

Detention basins may be combined with treatment BMPs discussed in this guidance document, to provide for other stormwater management objectives. For example, a stormwater pond may be designed to provide treatment as well as detention. However, a detention basin is not by itself considered a "Treatment Practice" under the AoT Regulations.

General Requirements Applicable to Detention Basins

- Detention basins are prohibited in areas of RSA 482-A jurisdiction unless a wetlands permit has been issued;
- A dam permit may be needed prior to construction (RSA 482), and any criteria set by the Dam Bureau more stringent than those listed in this document or the AoT Regulations apply (Env-Wr 100 - 700: Dam Safety Rules);
- Detention basins receiving stormwater from high-load areas must be lined;
- Provide small trash racks for outlets ≤ 6 inches in diameter or weirs ≤ 6 inches wide;
- Provide energy dissipation at inlets and outlets to prevent scour;
- Provide vegetation suitable to the soil type, moisture content, sun exposure, and the level of inundation anticipated for all areas of the detention basin, including the basin floors, side slopes, berms, impoundment structures, or other earthen structures;

- Underground detention basins must have access manholes located upstream, downstream, and at intermediate locations for providing maintenance.

Design Considerations

- Although detention basins are effective at controlling peak discharge rates leaving a site, in some cases, the timing of the release of water from the basin may be such that the peak flow in receiving waters further downstream may actually increase. The design of detention basins should consider such potential effects. The engineer should carefully select analysis points to account for the impacts of detention on the local drainage system, and may need to analyze flows at selected downstream hydraulic structures, in addition to the flows at the property line of a project.
- The design and construction of basins and impoundment structures must consider depth to bedrock, depth to groundwater, existing soil conditions, foundation conditions for embankments and structures, and other factors. The design of these structures should only be completed by licensed Professional Engineers qualified in this area of practice.
- Detention basins constructed with impoundment structures may be considered as dams subject to regulation under applicable New Hampshire Reservoir and Dam Safety Standards (Env-Wr 100 - 700: Dam Safety Rules). Also, see discussion of embankment design in Table 4-12.
- Maintenance access should be provided.
- Earth slopes and basin bottoms should be stabilized using seed mixes as recommended by NRCS.
- For a detention basin intended to be dry between storm events, consider the use of a pilot channel, together with sloped basin floor, to facilitate the drainage of the structure.

Maintenance Requirements

- The bottoms, interior and exterior side slopes, and crest of earthen detention basins should be mowed, and the vegetation maintained in healthy condition, as appropriate to the function of the facility and type of vegetation.
- Vegetated embankments that serve as “berms” or “dams” that impound water should be mowed at least once annually to prevent the establishment of woody vegetation.

Maintenance Requirements

- Embankments should be inspected at least annually by a qualified professional for settlement, erosion, seepage, animal burrows, woody vegetation, and other conditions that could degrade the embankment and reduce its stability for impounding water. Immediate corrective action should be implemented if any such conditions are found.
- Inlet and outlet pipes, inlet and outlet structures, energy dissipation structures or practices, and other structural appurtenances should be inspected at least annually by a qualified professional, and corrective action implemented (e.g., maintenance, repairs, or replacement) as indicated by such inspection;
- Trash and debris should be removed from the basin and any inlet or outlet structures whenever observed by inspection;
- Accumulated sediment should be removed when it significantly affects basin capacity.

Design References

- See Table 4-12

Design Criteria

Design Parameter	Criteria
Side Slopes	2:1 or flatter (2.5:1 or flatter recommended, see Note 1)
Minimum Crest Width	4 feet (6 feet recommended, see Note 2)
Design Discharge	50-year, 24-hour storm without overtopping embankment crest, 1' of free-board required.
Emergency Spillway	Required for basins that impound water above existing ground elevation, see Note 3.

Notes:

1. Env-Wr 403.02 requires embankment slopes of dams subject to jurisdiction to be no steeper than 2.5 horizontal to 1 vertical unless a specific design for a steeper slope shows that the embankment is stable and capable of being safely maintained.
2. Env-Wr 403.02 requires embankment crests of dams subject to jurisdiction to be at least 6 feet in width.
3. Emergency spillways must be provided to protect against embankment failure when the primary outlet fails to function. Generally, emergency spillways should be constructed in existing ground, not in the embankment section. Freeboard from top of embankment to the design water surface in the spillway should meet the requirements of Env-Wr 403.02. If no freeboard is specified, use a minimum of one foot.

Example Design

Plan View

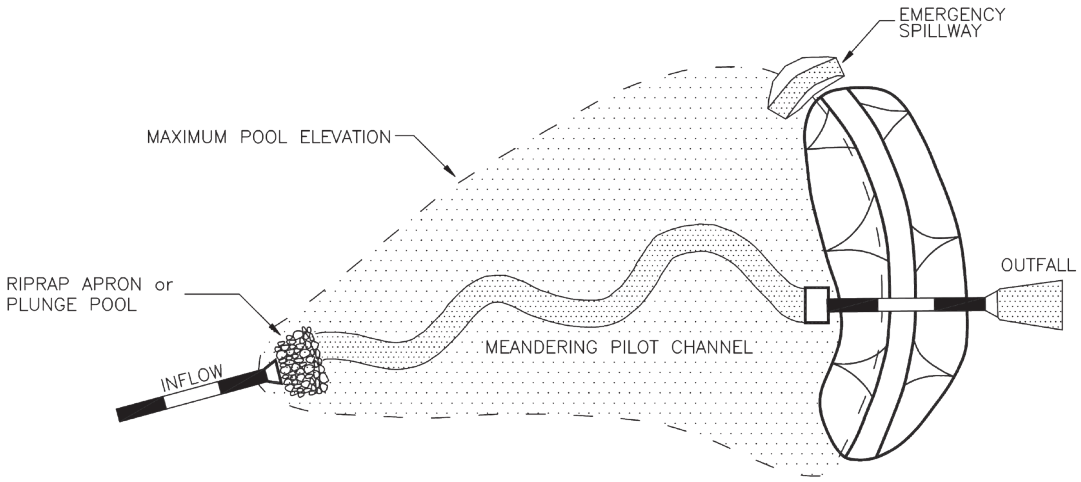

Profile

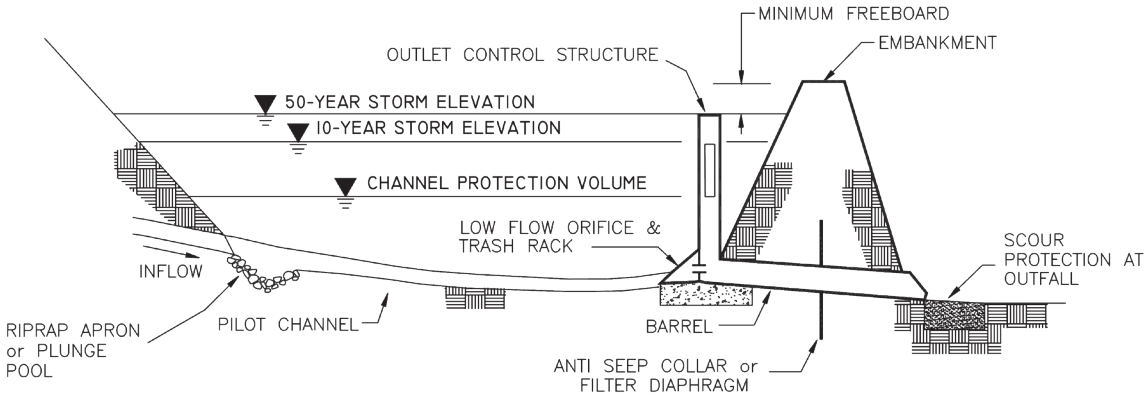

Adapted from MassHighway (2004)

Table 4-12. Considerations for Small Impoundment Structures

The design of Stormwater Management BMPs frequently involves the development of containment basins to store runoff from the contributing watershed. In some instances, these basins can be constructed by excavation. More frequently, the impoundments are created by earthen embankments, with ancillary discharge control structures.

These structures should be designed by professional engineers versed in the analysis and design of impoundments, and based on site specific information relative to watershed hydrology, site soils conditions, hydraulic behavior of receiving waters, hydraulic characteristics of inlet and outlet structures, and other parameters. In some instances, the design of the structures will be subject to regulatory review and licensing under governmental dam safety statutes, rules, and regulations, including, but not necessarily limited to the New Hampshire Reservoir and Dam Safety Standards (Env-Wr 100 - 700: Dam Safety Rules).

The following are some suggested general guidelines for parameters typically applied to the design of the relatively small impoundments used for stormwater management. However, this listing is not necessarily complete, and may not apply to particular site conditions. The design engineer on any particular project is responsible for research of applicable design standards, including regulatory requirements and codes, selection of methodologies, and performance of the analyses, calculations, and design procedures required to meet accepted engineering practice for the design of impoundments. Users of the following assume all risk associated with the application of this information to the design of impoundment structures.

Design References

Refer to New Hampshire Reservoir and Dam Safety Standards (Env-Wr 100 - 700: Dam Safety Rules), for design information and for information on accepted design references.

Embankment

- Top width per design reference guidelines for structural stability and access
- Side slopes for surface and structural stability
- Suitable foundation conditions
- Freeboard capacity during maximum design flood
- Construction materials for stability
- Seepage control
- Allowance for post-construction settlement
- Surface stabilization (vegetation, armor, etc.)
- Provisions for controlling undesirable vegetation on embankment slopes
- Where pipes or other conduits penetrate the embankment, provisions for “drainage diaphragm(s)” (specially designed layers of free-draining soil materials) or anti-seep collar(s) to prevent “piping” along exterior surface of conduit

Table 4-12. Considerations for Small Impoundment Structures

Principal Spillway (Outlet Structure)

- Capacity for controlled release of design storms (multiple-stage control of peak discharges)
- Capacity for overflow in storms exceeding design capacity of impoundment
- Provisions for intercepting and managing trash and debris
- Provisions for intercepting and managing floating pollutants
- Accessibility for routine maintenance and emergency servicing
- Provisions to prevent piping along exterior of conduit (see embankment guidelines)

Emergency Spillway

- Location to protect integrity of embankment (generally, the emergency spillway should not be located in the embankment, but in undisturbed original ground)
- Capacity to pass the routed design emergency storm (event based on applicable regulation); this emergency scenario may need to consider the primary outlet structure as non-functional during the event
- Adequate freeboard above emergency impoundment stage

Other

- Provisions for drawdown and maintenance of permanent pools
- Provisions for cleaning of forebays, cleaning and interior maintenance of basin
- Provisions for lining if needed for maintaining permanent water levels, or preventing direct discharge of stored runoff into sub-soils
- Provisions for contingency response to spills of oil or hazardous materials, which may be discharged into the basin

Note: Appendix C provides information on determining whether an impoundment structure is defined as a dam under the New Hampshire Reservoir and Dam Safety Standards.

2. STONE BERM LEVEL SPREADERS

General Description

A stone berm level spreader is an outlet structure constructed at zero percent grade across a slope used to convert concentrated flow to "sheet flow." It disperses or "spreads" flow thinly over a receiving area, usually consisting of undisturbed, vegetated ground. The conversion of concentrated flow to shallow, sheet flow allows runoff to be discharged at non-erosive velocities onto natural ground. To stabilize the spreader outlet, a stone berm is provided to dissipate flow energy, and help disperse flows along the length of the spreader.

Level spreaders are not designed to remove pollutants from stormwater; however, some suspended sediment and associated phosphorous, nitrogen, metals and hydrocarbons will settle out of the runoff through settlement, filtration, infiltration, absorption, decomposition and volatilization.

General Requirements Applicable to Stone Berm Level Spreaders

- The spreader must discharge to a vegetated receiving area with capacity to convey the discharge without erosion;
- The receiving area must be stable prior to construction of level spreader.

Design Considerations

- It is critical to install level spreaders at a zero percent grade along the length of the discharge lip. Flow must discharge uniformly along the length of the spreader.
- Care must be exercised in siting the spreader, so that it discharges onto a gently sloping grade, where runoff exiting the spreader will not re-concentrate and cause erosion. A slope that is concave in shape (such as a shallow swale) is not suitable for receiving the discharge from a level spreader. Suitable slopes are planar or convex in shape, so that flow will continue as dispersed sheet flow across the site.
- It is essential to stabilize the outlet lip of the spreader, and to discharge onto a well stabilized receiving area (preferably undisturbed vegetation) to prevent erosion.

Maintenance Requirements

- Inspect at least once annually for accumulation of sediment and debris and for signs of erosion within approach channel, spreader channel or down-slope of the spreader.
- Remove debris whenever observed during inspection.
- Remove sediment when accumulation exceeds 25% of spreader channel depth.
- Mow as required by landscaping design. At a minimum, mow annually to control woody vegetation within the spreader.
- Snow should not be stored within or down-slope of the level spreader or its approach channel.
- Repair any erosion and re-grade or replace stone berm material, as warranted by inspection.
- Reconstruct the spreader if down-slope channelization indicates that the spreader is not level or that discharge has become concentrated, and corrections cannot be made through minor re-grading.

Design References

- Maine DEP (2006)

Design Criteria

Design Parameter	Criteria
Slope of Receiving Area	< 15% (along flow path)
Level Spreader Grade	Bottom of spreader channel, and base and top of berm should be 0% grade
Spreader Channel Cross Section	6-inch deep trapezoidal trough
Spreader Channel Bottom Width	≥ 3 feet
Side Slopes	2:1 or flatter (level spreader channel and berm)
Berm Top Width	≥ 2 feet
Berm Height	≥ 18 inches
Stone Gradation	See Table 4-13
Length of Spreader	When part of a Treatment Practice, the length should be as required for that practice. If not, the length should be no less than 5 feet.

Table 4-13. Gradation of Stone for Level Spreader Berm

Sieve Designation	Percent by Weight Passing Square Mesh Sieve
12-inch	100%
6-inch	84% - 100%
3-inch	68% - 83%
1-inch	42% - 55%
No. 4	8% - 12%

Example Design

Profile

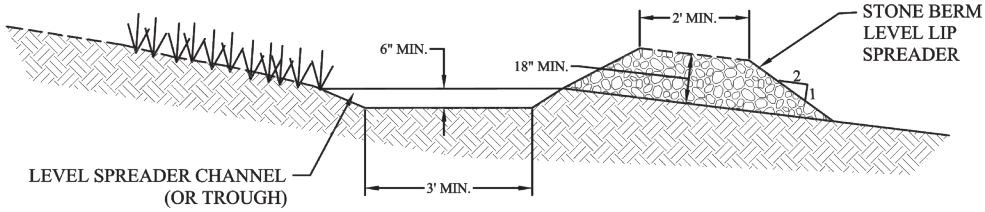

3. CONVEYANCE SWALES

General Description

Conveyance swales are stabilized channels designed to convey runoff at non-erosive velocities. They may be stabilized using vegetation, riprap, or a combination, or with an alternative lining designed to accommodate design flows while protecting the integrity of the sides and bottom of the channel. Conveyance channels may provide incidental water quality benefits, but are not specifically designed to provide treatment. Conveyance swales are not considered a Treatment or Pretreatment Practice under the AoT regulations, unless they are also designed to meet the requirements of an acceptable Treatment/Pretreatment Practice as described elsewhere in this Chapter.

General Requirements Applicable to Conveyance Swales

- Swales receiving stormwater from high-load areas must be lined (impermeable liner) to isolate the runoff from contact with underlying soil and groundwater.

Design Considerations

- All channels should be designed for *capacity* and *stability*. A channel is designed for *capacity* when it can carry the maximum specified design flow within the design depth of the channel (allowing for recommended freeboard). A channel is designed for *stability* when the channel lining (vegetation, riprap, or other material) will not be eroded under maximum design flow velocities. Analyses of these conditions must account for both the type of lining and its condition (for example, capacity analysis for a grassed channel must consider the resistance of the maximum height of grass, while the stability analysis must consider the grass under its shortest, mowed condition).
- Vegetation should be selected based on site soil conditions, anticipated mowing height and frequency, and design flow velocities.
- If channels must be lined with an impermeable liner, the design should take into consideration the effects of hydrostatic uplift by seasonal high water table (if present).

Example Design

Section

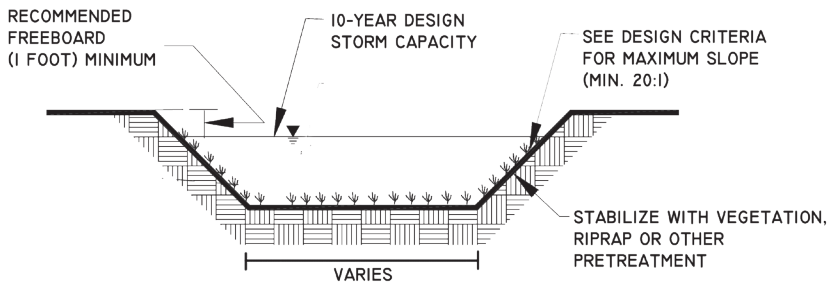

Adapted from MassHighway (2004)

Maintenance Requirements

- Grassed channels should be inspected periodically (at least annually) for sediment accumulation, erosion, and condition of surface lining (vegetation or riprap). Repairs, including stone or vegetation replacement, should be made based on this inspection.
- Remove sediment and debris annually, or more frequently as warranted by inspection.
- Mow vegetated channels based on frequency specified by design. Mowing at least once per year is required to control establishment of woody vegetation. It is recommended to cut grass no shorter than 4 inches.

Design References

- EPA (1999e)

Design Criteria

Design Parameter	Criteria
Shape	Trapezoidal or parabolic
Side Slopes	3:1 or flatter (if not lined with riprap) 2:1 (if lined with riprap) Alternative slopes may be possible with properly designed turf reinforcement. Such design should be documented.
Design Capacity	10-year, 24-hour storm

4. TERRACED SLOPES OR BENCHING

General Description

The land grading practice of providing terraced slopes or benching consists of shaping disturbed land surfaces to control the length of flow down steep slopes. Intermediate terraces (or benches) are incorporated into slopes that exceed 4:1 gradient. These terraces are then used to convey runoff laterally to a safe discharge (or to a constructed drainage system). The purpose of this practice is to provide for erosion control and vegetative establishment on those areas where the existing land surface is to be reshaped by grading.

Provisions should be made to safely conduct surface runoff collected by the terraced slope to storm drains, stabilized channels, or other stable conveyance practices or water courses. Runoff should also be intercepted at the top of the slopes and directed to a stable outlet.

General Requirements Applicable to Conveyance Swales

- Benches are required wherever the vertical height of a slope meets the conditions listed in the Design Criteria table;
- Benches, when required, must divide the slope face into equal parts;
- Benches must convey stormwater to a stable outlet.

Design Considerations

- Designs should address soil conditions, seeps, rock outcrops, the up-slope contributing drainage area, and other site conditions in the design of benches.
- All disturbed areas should be stabilized structurally or with vegetation.
- All graded or disturbed areas including slopes should be protected during clearing and construction in accordance with the approved erosion and sediment control plan until they are adequately stabilized.
- Surface water should generally be diverted from the face of cut and/or fill slopes by the use of diversions, ditches and swales or conveyed downslope by the use of a designed structure, except where the face of the slope has been specifically engineered to receive such drainage, in which case:
    - The face of the slope must be stabilized with vegetation, riprap, or other stabilization measure and the face of all graded slopes will be protected from surface runoff until stabilized, and
    - The face of the slope must not be subject to any concentrated flows of surface water such as from natural drainage ways, graded swales, roof drain outlets, drainage system outlets, and other sources.

Maintenance Requirements

- Grassed slopes should be mowed to grass height and frequency specified by design.
- Vegetated slopes should be inspected periodically for signs of vegetation loss or damage, with restoration as needed.
- Terraces and slopes should be inspected periodically for any sign of rill or gully erosion, and if such conditions are noted, the area should be immediately investigated and repaired as needed.

Design References

- Connecticut DEP (2002)

Example Design

Profile

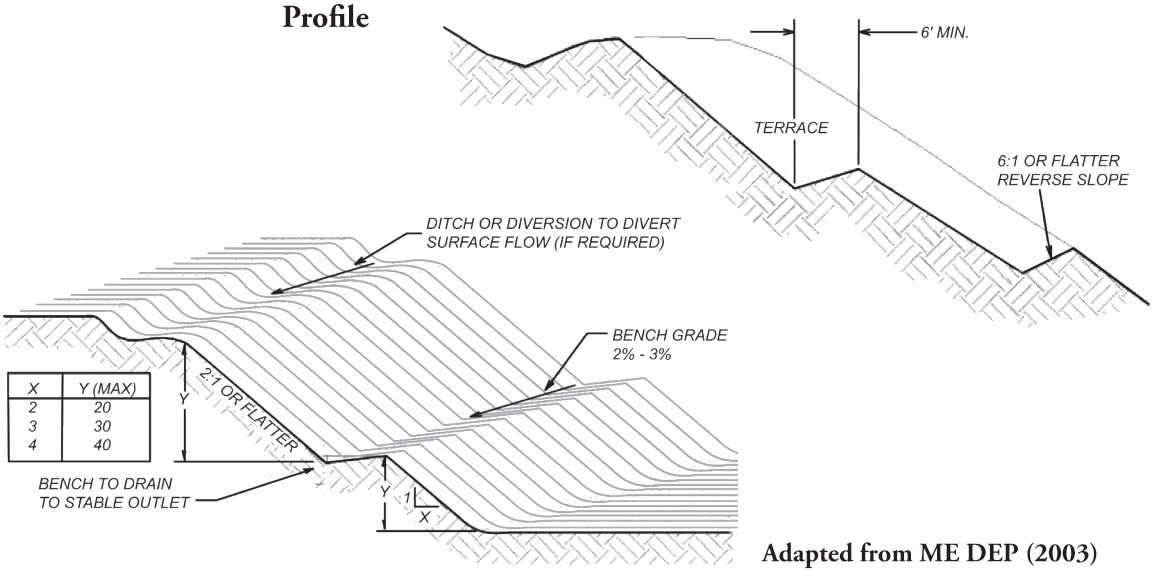

X	Y (MAX)
2	20
3	30
4	40

Adapted from ME DEP (2003)

Design Criteria

Design Parameter	Criteria
Slopes Requiring Terracing/Benching	Any 2:1 slope with vertical height ≥ 20 feet Any 3:1 slope with vertical height ≥ 30 feet Any 4:1 slope with vertical height ≥ 40 feet
Minimum Bench Width	≥ 6 feet
Bench Reverse Slope	6:1 or flatter (reverse slope from top of lower slope to toe of upper slope) and minimum 1' in depth
Bench Gradient to Outlet	2% to 3%
Maximum Flow Length Along Bench	≤ 800 feet
Bench Gradient to Outlet	2% to 3%
Maximum Flow Length Along Bench	≤ 800 feet

5. FLOW SPLITTERS

General Description

A flow splitter is an engineered structure used to divide flow into two or more directions. The structure typically consists of a manhole, precast concrete vault, or other structure divided into chambers, with the chambers separated by hydraulic control elements. Various hydraulic devices (such as pipes, weirs, or orifices) can be used to control the direction and quantity of flow entering the structure. Generally, a flow splitter consists of a structure with one inlet and two outlets set at different elevations. One outlet conveys low flows, such as those during small storms or at the beginning of a large storm. The other outlet conveys high flows occurring later in the storm. The flows are conveyed in different directions for water quantity or quality control.

The flow splitter is typically used to direct base flows and smaller storm flows to an "off-line" water quality treatment or pretreatment practice, with larger storms directed to an alternative outlet to bypass, and thus prevent overloading of, the treatment system. This simple type of device works on hydraulic principles and does not require mechanical components or instrumentation.

Design Considerations

- Design must be compatible with the hydraulic capacities of the devices located downstream of the flow splitter outlets.
- Design requires careful evaluation of hydraulic performance of the system, and must account not only for inlet and outlet flow rates, but also for headwater and tailwater conditions, and head losses at transitions through the structure.
- Flow splitters should be accessible for maintenance, and sufficient manhole access should be provided to enable inspection, cleaning, and repair of each chamber.

Maintenance Requirements

- Flow splitters should be inspected concurrently with the conveyance and treatment practices served by the devices. It is recommended that the device be inspected and maintained at least once annually.
- Sediments and debris should be removed and disposed as for other components of the drainage system.

Design Criteria

- Engineers are responsible for developing hydraulic, structural, and other design criteria specific to the project site.

Example Design

Manhole Plan View

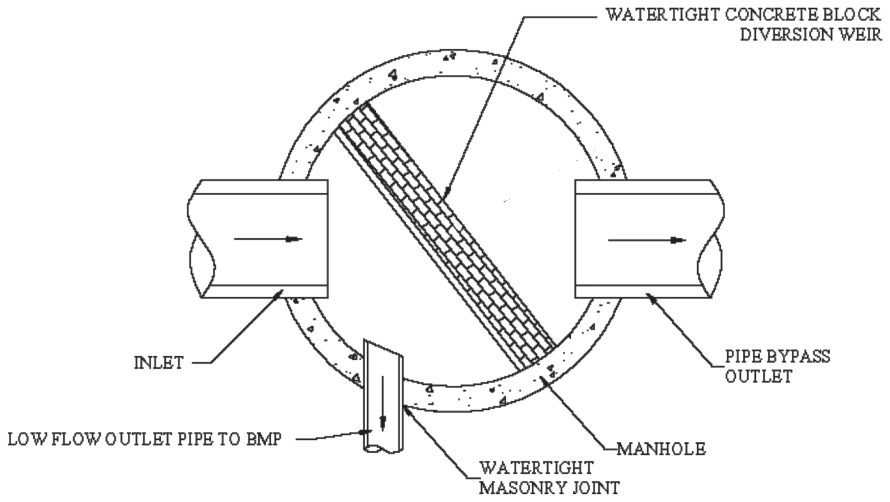

Flow Splitter Box Plan View

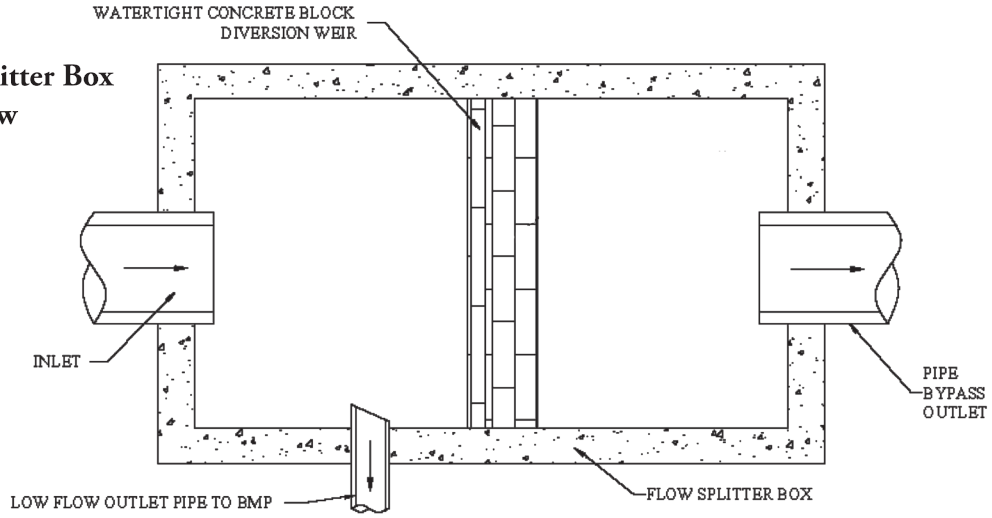

Profile

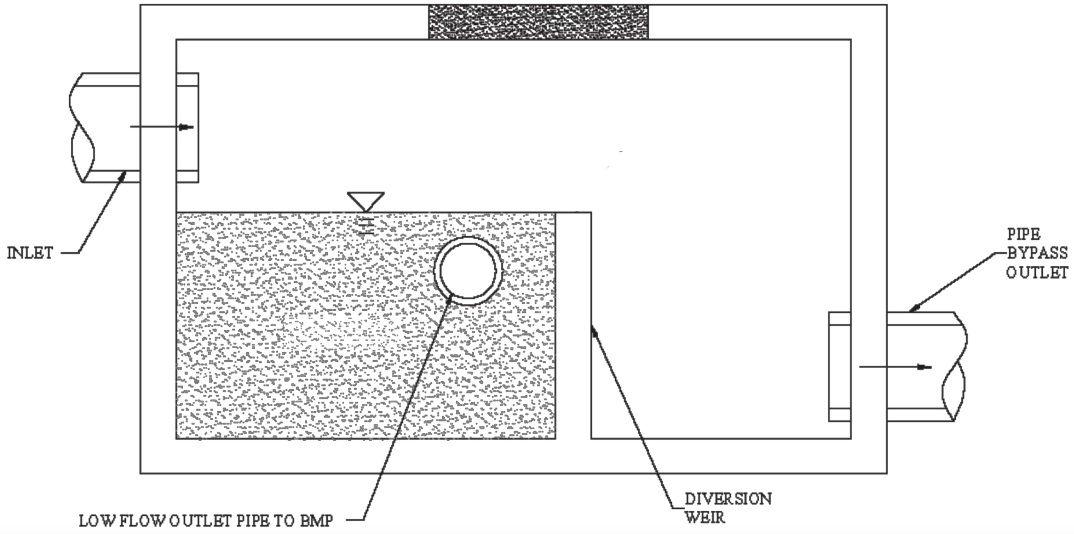

6. OUTLET PROTECTION

General Description

Outlet protection is typically provided at stormwater discharge conduits from structural best management practices to reduce the velocity of concentrated stormwater flows to prevent scour and minimize the potential for downstream erosion. Outlet protection is also provided where conduits discharge runoff into an in-ground stormwater management practice (e.g., pond or swale) to prevent scour where flow enters the BMP.

Standard engineering practices allow for many different types of outlet protection which provide energy dissipation. Common outlet protection measures include:

- Riprap aprons, the design of which is covered within this section;
- Riprap lined scour holes, stilling basins or plunge pools. Design references for stilling basins are provided under 'Design References'.

Other outlet protection practices may be used, if documented by applicable technical literature.

Design Considerations

- The entire length of the flow path from the outlet of the conduit, channel or structure to the point of entry into an existing stream or publicly maintained drainage system should be evaluated for the need for outlet protection.
- There should be no bends or curves at the intersection of the conduit and apron.
- There should be no overfall from the end of the apron to the receiving channel.
- The design criteria presented below typically apply to pipes that are designed to be full at the 25 year storm. Where pipes do not flow full, designers should consult applicable design references for alternative apron sizing, particularly where the construction of the apron would disturb existing water resources. For example, wetland crossings should seek alternative apron sizing so as to not over-design, thereby limiting the wetland impacts to only those that are necessary.

Maintenance Requirements

- Inspect the outlet protection annually for damage and deterioration. Repair damages immediately.

Example Designs

Apron

Plan View

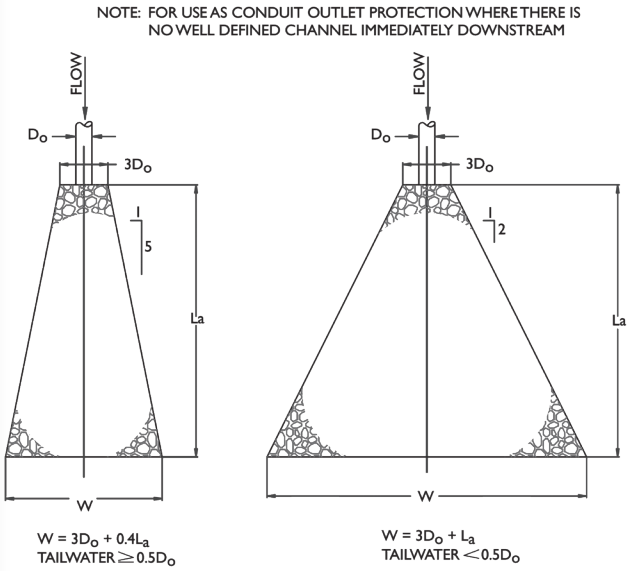

Source: CT DEP (2002)

Preformed Scour Hole

Plan View

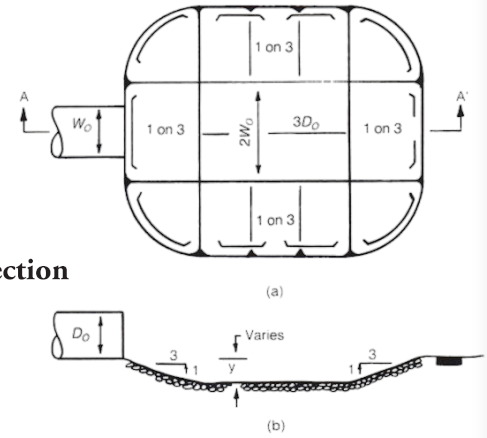

Section

Source: ASCE (1992)

Design References

- Agricultural Service Research Publication ARS-76. (1989).
- American Society of Agricultural Engineers. (1994).
- American Society of Civil Engineers. (1975).
- American Society of Civil Engineers and the Water Environment Federation. (1992).
- U.S. Department of the Interior, Bureau of Reclamation, Engineering Monograph No. 25.
- U.S. Department of Transportation, Hydraulic Engineering Circular No. 14. (1975).
- U.S. Environmental Protection Agency. (1976).

Table 4-14. Allowable Design Flow Velocities for Various Soils

Soil Texture	Allowable Velocity (feet per second)
Sand and sandy loam	2.5
Silt loam	3.0
Sandy clay loam	3.5
Clay loam	4.0
Clay, fine gravel, graded loam to gravel	5.0
Cobbles	5.5
Shale	6.0

Source: Connecticut DEP (2002)

Design Criteria

Design Parameter	Criteria
Apron Length	$L_a = 1.8Q/D_o1.5 + 7D_o$ (when $TW < D_o/2$) $L_a = 3.0Q/D_o1.5 + 7D_o$ (when $TW > D_o/2$) Where: L_a = length of the apron (feet) D_o = maximum inside width of outlet pipe or channel (feet) Q = outlet discharge (cfs) TW = tailwater elevation (feet)
Apron Width at the Outlet End of the Apron (when there is a well-defined channel downstream of the apron)	Bottom width of the apron > bottom width of channel. The structural lining should extend at least 1 foot above the tailwater elevation but no lower than 2/3 of the vertical conduit dimension above the conduit invert
Apron Width at the Outlet End of the Apron (when there is ***no*** well-defined channel ddownstream of the apron)	$W = 3D_o + L_a$ (when $TW < D_o/2$) $W = 3D_o + 0.4L_a$ (when $TW > D_o/2$) Where: W = width of the apron (feet) L_a = length of the apron (feet) D_o = maximum inside width of outlet pipe or channel (feet) TW = tailwater elevation (feet)
Apron Width at the Culvert Outlet	$W = 3\ D_o$
Side Slopes of Channel Bank Adjacent to Apron	2:1 or flatter
Bottom Grade	0%
Riprap Diameter	$D_{50} = 0.02Q^{1.3}/(TW*D_o)$ Where: D_{50} = median stone diameter (feet) Q = outlet discharge (cfs) TW = tailwater elevation (feet) D_o = maximum inside width of outlet pipe or channel (feet) 50% of stone by weight should be smaller than D_{50}. The largest stone size should be 1.5 times D_{50}. Gabions or precast cellular blocks may be substituted for riprap if the D_{50} size calculated above is less than or equal to the thickness of the gabions or concrete revetment blocks.
Preformed Scour Hole	If preformed scour hole is used instead of an apron, see *ASCE (1992)* in lieu of the above criteria.