- Conceptual illustration or graphic depicting a typical design of the practice.

These fact sheets are intended to provide general sizing information for the practices presented, together with a conceptual overview of the practice. While the BMP "fact sheets" summarize the criteria for designing BMPs, they are meant to provide an overview of the measures discussed. There is extensive literature that describes the practices listed in this document, with many competent texts on the selection, siting, design, and operational characteristics of these BMPs. NHDES expects engineers, contractors, and professionals performing technical reviews to consult the design reference literature currently considered as accepted practice, and to prepare for and implement erosion and sediment controls on construction projects in New Hampshire.

Project applicants are also responsible for the design of projects in compliance with applicable local, state, and federal regulations, which may have specific standards and requirements for erosion and sediment control practices.

4-1. Erosion Control Practices

The following Erosion Control Practices are discussed in this Section:

- Construction phasing
- Dust control
- Grading practices
- Soil stockpile practices
- Temporary and permanent mulching
- Vegetation
- Temporary erosion control blanket
- Diversion
- Slope drain

CONSTRUCTION PHASING

General Description

Land grading activities are an essential component of site development and building construction, and are also often required for redevelopment construction. Land grading is often necessary to shape the existing land surface in accordance with a plan determined by engineering surveys and layout. The sequencing or phasing of land grading activities is essential to minimize the potential for erosion. Typically, a contractor will complete subgrade land grading activities and base course paving to prepare the site for the construction of buildings and other structures.

Proper construction phasing reduces the exposure of slopes to runoff and potential erosion, provides for stable temporary or permanent slopes, and facilitates the establishment of vegetation. When developing Construction-phasing activities, the contractor should anticipate potential delays in the schedule and be prepared to adjust activities to meet both project goals and erosion control goals.

Considerations

Construction phasing of land grading activities must be carefully planned and carried out to prevent erosion and sedimentation.

- Plan earth disturbance and grading activities to minimize the area of soil exposed at one time, as well as the length of time between initial soil exposure and final grading.
- Protect existing vegetation and natural forest cover, designated to remain on the site.
- Preserve and maintain buffer strips of undisturbed vegetation between construction areas and environmentally vulnerable areas such as watercourses, ponds, and wetlands.
- Divert clean water away from the immediate construction area to reduce the threat of erosion.

- Disperse clean stormwater to undisturbed, vegetated, flat or moderate-sloped, surfaces wherever possible, rather than concentrate it into channels.
- Fall and winter erosion control measures must be upgraded and refined to protect the site from spring runoff and snowmelt

Maintenance Requirements

- Any sign of rill or gully erosion should be immediately investigated and repaired as needed.
- Temporary stabilization measures should be inspected at least once per week during the construction period, or as stipulated by the applicable permits, until all exposed soils have been permanently stabilized.
- In addition to regular inspections, the project site should be inspected during or within 24 hours of any rain event in which ½ inch of precipitation or more falls within a 24-hour period.
- Inspections should be documented in a report. Reports should include the following:
- The inspection date;
    - Names, titles, and qualifications of personnel making the inspection;
    - Weather information and a description of any discharges occurring at the time of the inspection;
    - Location(s) of discharges of sediment or other pollutants from the site;
    - Location(s) of BMPs that need to be maintained;
    - Location(s) of BMPs that failed to operate as designed or proved inadequate for a particular location;
    - Location(s) where additional BMPs are needed that did not exist at the time of inspection; and
    - Corrective action required including implementation dates.

Specifications

- *Temporary stabilization:* All areas of exposed or disturbed soil should be temporarily stabilized as soon as practicable but no later than 45 days from the time of initial disturbance, unless a shorter time is specified by local authorities, the construction sequence approved as part of the issued permit, or an independent monitor.
- *Permanent stabilization:* All areas of exposed or disturbed soil should be permanently stabilized as soon as practicable but no later than 3 days following final grading.

Stabilization

A site is deemed to be stabilized when it is in a condition in which the soils on the site will not experience accelerated or unnatural erosion under the conditions of a 10-year storm, such as but not limited to:

- In areas that will not be paved, a minimum of 85% vegetative cover has been established, a minimum of 3" of non-erosive material such as stone or a certified compost blanket has been installed, or erosion control blankets have been installed.
- In areas to be paved, base course gravels have been installed.

- *Maximum area of disturbance:* The area of unstabilized soil should not exceed 5 acres at any time unless project permits specifically provide for a greater area of disturbance. Any such greater area of disturbance requires, as part of the permitting process:
    - Documentation that the required areas of earth cuts and fills are such that an area of disturbance of 5 acres or less would unreasonably limit the construction schedule;

- An approved construction sequence plan, developed by a professional engineer licensed to practice in the state of New Hampshire or a Certified Professional in Erosion and Sediment Control as certified by the CPESC Council of EnviroCert International, Inc.; and
- Employment or retainment of a professional engineer licensed to practice in the state of New Hampshire or a Certified Professional in Erosion and Sediment Control as certified by the CPESC Council of EnviroCert International, Inc. to serve as an environmental monitor during construction.

- Only disturb, clear, or grade areas necessary for construction. Flag or otherwise delineate areas not to be disturbed. Exclude vehicles and construction equipment from these areas to preserve natural vegetation.
- All graded or disturbed areas including slopes should be protected during clearing and construction in accordance with an approved erosion and sediment control plan until they are permanently stabilized.
- All erosion and sediment control practices and measures should be constructed, applied and maintained in accordance with the approved erosion and sediment control plan.
- Topsoil required for the establishment of vegetation should be stockpiled in the amount necessary to complete finished grading and protected from erosion.
- Stockpiles, borrow areas and spoils should be stabilized as described under "Soil Stockpile Practices."
- Slopes should not be created so close to property lines as to endanger adjoining properties without adequate protection against sedimentation, erosion, slippage, settlement, subsidence or other related damages.
- Areas to be filled should be cleared, grubbed and stripped of topsoil to remove trees, vegetation, roots or other objectionable materials.

- Areas should be scarified to a minimum depth of 3 inches prior to placement of topsoil. Topsoil should be placed without significant compaction to provide a loose bedding for placement of seed.
- All fills should be compacted in accordance with project specifications to reduce erosion, slippage, settlement, subsidence or other related problems. Fill intended to support buildings, structures, site utilities, conduits, and other facilities, should be compacted in accordance with local requirements or codes.
- In general, fills should be placed and compacted in layers ranging from 6 to 24 inches in thickness. The contractor should review the project geotechnical report for specific guidance. Fill material should be free of brush, rubbish, rocks, logs, stumps, building debris, frozen material and other objectionable materials that would interfere with or prevent construction of satisfactory lifts.
- Frozen material or soft, mucky or highly compressible materials are susceptible to accelerated settlement and potential accelerated erosion. Work in these materials should be performed under the direction of a professional engineer.
- The outer face of the fill slope should be allowed to stay loose, not rolled, compacted, or bladed smooth. A bulldozer may run up and down the fill slope so the dozer treads (cleat tracks) create grooves perpendicular to the slope. If the soil is not too moist, excessive compaction will not occur. See "Surface Roughening."
- Roughen the surface of all slopes during the construction operation to retain water, increase infiltration, and facilitate vegetation establishment.
- Use slope breaks, such as diversions, benches, or contour furrows as appropriate, to reduce the length of cut-and-fill slopes to limit sheet and rill erosion and prevent gully erosion. All benches should be kept free of sediment during all phases of development.

- Seeps or springs encountered during construction should be evaluated by a professional engineer to determine if the proposed design should be revised to properly manage the condition.
- Stabilize all graded areas with vegetation, crushed stone, compost blanket, or other ground cover as soon as grading is completed or if work is interrupted for 21 working days or more. Use mulch or other approved methods to stabilize areas temporarily where final grading must be delayed.
- All graded areas should be permanently stabilized immediately following finished grading.

DUST CONTROL

General Description

Dust control consists of applying various measures to prevent blowing and movement of dust from exposed soil surfaces. This practice is applicable to areas subject to dust blowing and soil movement where on-site and off-site damage is likely to occur if preventive measures are not taken. Typical dust control measures include traffic control, Construction phasing, and maintenance of existing vegetation to limit exposure of soils and prevent conditions that result in dry soils and dust; application of water, calcium chloride, and temporary stabilization practices to control mobilization of dust by equipment operation or wind; and pavement sweeping to prevent accumulation of dust-producing sediment.

Dusty conditions occur when a disturbed site, soil stockpiles, or unpaved road surfaces dry out. Soil fines can actually shrink due to moisture loss that, in turn, loosens and weakens the soil surface. The dust becomes mobilized by equipment trafficking or by wind action. Dust can also become mobilized from construction equipment spilling or tracking soil materials onto paved surfaces, as well as from the operation of stationary equipment such as rock crushers. Dust can cause off-site damage, be a health hazard to humans, wildlife and plant life, or become a traffic safety hazard.

Considerations

- Phase construction and sequence earth disturbance activities to reduce the area of land disturbed at any one time.
- Maintain as much natural vegetation as is practicable.
- Use traffic control to restrict traffic to predetermined routes.

- Use temporary mulching, permanent mulching, temporary vegetative cover, permanent vegetative cover, or sodding to reduce the need for dust control.
- Use mechanical sweepers on paved surfaces where necessary to prevent dust buildup. Stationary sources of dust (i.e., rock crushers) should utilize fine water sprays to control dust.
- Apply water, or other dust inhibiting agents or tackifiers, as approved by the NHDES.

Maintenance Requirements

- When temporary dust control measures are used, repetitive treatment should be applied as needed to accomplish control.

Specifications

Water Application:

- Moisten exposed soil surfaces periodically with adequate water to control dust.
- Avoid excessive application of water that would result in mobilizing sediment and subsequent deposition in natural waterbodies

Stone Application:

- Cover surface with crushed stone or coarse gravel.
- In areas adjacent to waterways, use only chemically stable or washed aggregate.

Other Commercial Products:

- The use of other commercial products (i.e., tackifiers) to stabilize exposed surfaces for dust control will be subject to acceptance by NHDES on a project-specific basis.

Other Practices:

- Apply other temporary and permanent stabilization practices as specified in this manual.
- Calcium chloride cannot be applied in watersheds with chloride-impaired waterbodies. Elsewhere, it should only be used when other methods are not practical, and following these guidelines:
    - For dry application, use a commercial chemical product that is either loose dry granules or flakes, fine enough to feed through a spreader at a rate that will keep the surface moist but not cause pollution or plant damage.
    - For liquid applications, the application rate will vary depending on the relative quality of materials in a given road surface. Some calcium chloride suppliers may require a road sample before recommending an application rate. Typically, 30% calcium chloride is recommended for most gravel roads.

SURFACE ROUGHENING

General Description

Surface roughening is a technique for creating furrows in a bare soil surface, by tracking the slope with construction equipment. The purpose of surface roughening is to aid the establishment of vegetative cover from seed, to reduce runoff velocity and increase infiltration, and to reduce erosion and provide for sediment trapping.

This practice applies to all construction slopes to facilitate long-term stabilization with vegetation, and particularly slopes steeper than 3:1.

Considerations

Graded areas with smooth, hard surfaces may be initially attractive, but such surfaces increase the potential for erosion. A rough, loose soil surface gives a mulching effect that provides more favorable moisture conditions than hard, smooth surfaces; this aids seed germination.

Methods for achieving a roughened soil surface on a slope include tracking, furrowing, and serrating (or grooving). Selection of the method is based on slope steepness, mowing requirements, and whether the slope is formed by cutting or filling.

Maintenance Requirements

- Any sign of rill or gully erosion should be immediately investigated and repaired as needed.
- Periodically inspect seeded slopes for rills or other signs of erosion. Fill these areas slightly above the original grade, reseed, and mulch as soon as possible, but no more than 3 days following inspection.

Specifications

Cut Slope Roughening:

- Groove the slope using machinery to create a series of ridges and depressions that run across the slope, on the contour.

Fill Slope Roughening:

- In general, fill slopes with a gradient steeper than 3:1 should be constructed in lifts not to exceed 12 inches, compacting each lift. The contractor should refer to the project geotechnical report for specific guidance.
- The face of the slope should consist of loose, uncompacted fill 4-6 inches deep.
- Use grooving or tracking to roughen the face of the slopes, if necessary.
- Apply seed, fertilizer and straw mulch, and then track or punch in the mulch with the bulldozer.
- Do not blade or scrape the final slope face.

Cuts, Fills, and Graded Areas:

- Make mowed slopes no steeper than 3:1.
- Roughen these areas to shallow grooves by normal tilling, disking, or harrowing. The final pass of any such tillage should be on the contour.
- Make grooves formed by such implements close together (less than 10 inches), and not less than 1 inch deep.
- Excessive roughness is undesirable where mowing is planned.

Roughening With Tracked Machinery:

- Limit roughening with tracked machinery to soils with a sandy textural component to avoid undue compaction of the soil surface.

- Operate tracked machinery up and down the slope to leave horizontal depressions in the soil. Do not back-blade during the final grading operation.
- Immediately seed and mulch roughened areas to obtain optimum seed germination and growth.

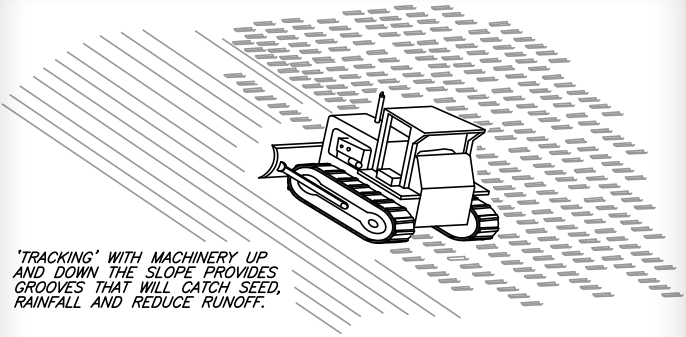

TRACKING

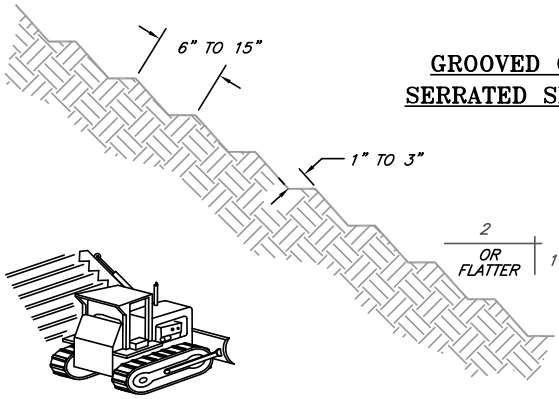

GROOVED OR SERRATED SLOPE

NOT TO SCALE

NOTE:

GROOVE BY CUTTING SERRATIONS ALONG THE CONTOUR. IRREGULARITIES IN THE SOIL SURFACE CATCH RAINWATER, SEED, MULCH AND FERTILIZER.

SURFACE ROUGHENING

ADAPTED FROM J. McCULLAH 1994

SOIL STOCKPILE PRACTICES

General Description

Soil stockpile practices include measures to locate, manage, and protect stockpiled earth materials, to reduce or eliminate wind and water erosion, and prevent resulting air and water pollution from displaced sediment. Stockpile practices apply to topsoil, excavated materials, borrow materials imported to the site, and construction aggregates and paving materials that are stockpiled on the site prior to use in the construction work.

Considerations

- Soil stockpiles should be sited on the site in compliance with all permit conditions governing setbacks from adjacent property lines and water resources (including wetlands).
- Soil and erosion control practices at stockpiles should be regularly inspected and should be adjusted immediately to respond to ongoing construction operations, as the delivery of new materials or the removal of materials for incorporation into the work may require modification and updating of the protective measures to keep them effective.

Maintenance Requirements

- Inspect all soil stockpiles immediately after storm events and at the frequencies specified in the project erosion and sediment control plan and in applicable permits. At a minimum, inspect weekly during wet weather periods to verify that erosion and sediment control measures are in place and functioning properly.
- Repair and/or replace perimeter controls and stockpile coverings as needed to keep them functioning properly.

Specifications

General:

- Locate stockpiles a minimum of 50 feet away from concentrated flows of stormwater, drainage courses, and inlets.
- Protect all stockpiles from stormwater run-on using temporary perimeter measures such as diversions, berms, sandbags, or other approved practice.
- Stockpiles should be surrounded by sediment barriers as described in this manual, to prevent migration of material beyond the immediate confines of the stockpiles.
- Implement wind erosion control practices as appropriate on all stockpiled material.
- Place bagged materials on pallets and under cover.

Protection of Inactive Stockpiles:

- Inactive soil stockpiles should be covered with anchored tarps or protected with soil stabilization measures (temporary seed and mulch or other temporary stabilization practice) and temporary perimeter sediment barriers at all times.
- Inactive stockpiles of concrete rubble, asphalt concrete rubble, aggregate materials, and other similar materials should be protected with temporary sediment perimeter barriers at all times. If the materials are a source of dust, they should also be covered.

Protection of Active Stockpiles:

- All stockpiles should be surrounded with temporary linear sediment barriers prior to the onset of precipitation. Perimeter barriers should be maintained at all times, and adjusted as needed to accommodate the delivery and removal of materials from the stockpile. The integrity of the barrier should be inspected at the end of each working day.
- When a storm event is predicted, stockpiles should be protected with an anchored protective covering.

TEMPORARY & PERMANENT MULCHING

General Description

Temporary mulching consists of the application of plant residues or other suitable materials to the soil surface. Mulching reduces erosion potential by protecting the exposed soil surface from direct impact by rainfall. It also aids in the growth of vegetation by conserving available moisture, controlling weeds, and providing protection against extreme heat and cold. Mulches can also protect the infiltration rate of the soil, prevent soil compaction, and provide a suitable microclimate for seed germination. This is the quickest and most cost effective method of preventing erosion on disturbed soils and its value should not be underestimated.

Permanent mulch consists of the application of long-term surface cover such as bark, wood chips, or erosion control mix. Permanent mulch can be used as a permanent ground cover, as an overwinter stabilization mulch, or left to naturalize. It is not designed to support grass vegetation, but legumes or woody vegetation may be established for additional stability. Permanent mulch must not be used in areas of concentrated water flows. Slopes with evidence of groundwater seepage may require the use of other treatments such as riprap.

The composition of "erosion control mix" is further described in this section. In addition to its use for the temporary or semi-permanent stabilization of slopes, it can be applied to protect areas from erosion during spring thaw. It can also been used in construction yards to mitigate muddy conditions. In these applications, the erosion control mix application rate will need to be adjusted for the site conditions, use, and long-term effectiveness. With time, the organic component of the erosion control mix will decompose and become ineffective. Any required repairs should be made immediately, with additional erosion control mix placed on top to reach the desired thickness.

Considerations

- Within 100 feet of streams, wetlands and in lake watersheds, temporary mulch should be applied **within 7 days of exposing soil or prior to any storm event**.
- Areas that have been temporarily or permanently seeded should be mulched immediately following seeding.
- Areas that cannot be seeded within the growing season should be mulched for over-winter protection. The area should be seeded at the beginning of the next growing season.
- Mulch anchoring should be used on slopes with gradients greater than 5% in late fall (past September 15), and over-winter (September 15 - May 15).
- Permanent mulch can be used in conjunction with tree, shrub, vine, and ground cover plantings.

Maintenance Requirements

- All temporary mulches must be inspected periodically and in particular after rainstorms, to check for rill erosion or displacement of the mulch. If less than 90% of the soil surface is covered by mulch, additional mulch should be immediately applied. Nets must be inspected after rain events for dislocation or failure. If washouts or breakages occur, repair any damage to the slope and re-install or replace netting as necessary. Inspections should take place until grasses are firmly established (85% soil surface uniformly covered with healthy stand of grass).
- Erosion control mix mulch used for temporary stabilization should be left in place. Vegetation adds stability and should be promoted.
- Where permanent mulch is used in conjunction with ornamental plantings, inspect periodically throughout the year to determine if mulch is maintaining coverage of the soil surface. Repair as needed.

- Permanent mulched areas should be inspected at least annually, and after each large rainfall (2.5 inches or more in a 24-hour period). Any required repairs should be made immediately. Where erosion control mix has been used, place additional mix on top of the mulch to maintain the recommended thickness. When the mulch is decomposed, clogged with sediment, eroded or ineffective, it must be replaced or repaired.
- If the mulch needs to be removed, spread it out into the landscape.

Specifications

General:

- Apply mulch prior to a storm event. This is applicable in extremely sensitive areas such as within 100 feet of lakes, ponds, rivers, streams, and wetlands. It will be necessary to closely monitor weather predictions to have adequate warning of significant storms.
- Mulching should be completed within the following specified time periods from original soil exposure:
    - Within 100 feet of rivers and streams, wetlands, and in lake and pond watersheds, the time period should be no greater than 7 days. This 7-day limit should be reduced further during wet weather periods.
    - In other areas, the time period can range from 14 to 30 days, the length of time varying with site conditions (soil erodibility, season of year, extent of disturbance, proximity to sensitive resources) and the potential impact of erosion on adjacent areas. Other state or local restrictions may also apply.
- The choice of materials for mulching should be based on site conditions, soils, slope, flow conditions, and time of year.

Hay or Straw Mulches:

- Organic mulches including hay and straw should be air-dried, free of undesirable seeds and coarse materials.
- Application rate should be 2 bales (70-90 pounds) per 1000 square feet or 1.5 to 2 tons (90-100 bales) per acre to cover 75 to 90 % of the ground surface.
- Hay or straw mulch should be anchored to prevent displacement by wind or flowing water, using one of the following methods:
    - Netting: Install jute, wood fiber, or biodegradable plastic netting over hay or straw to anchor it to the soil surface. Install netting material according to manufacturer's recommendation. Netting should be used judiciously, as wildlife can become entangled in the materials.
    - Tackifier: Apply polymer or organic tackifier to anchor hay or straw mulch. Application rates vary by manufacturer: typically 40-60 lbs/acre for polymer material, and 80-120 lbs/acre for organic material. Liquid mulch binders are also typically applied heavier at edges, in valleys, and at crests than other areas.
- When mulch is applied to provide protection over winter (past the growing season), it should be applied to a depth of four inches (150-200 pounds of hay or straw per 1000 square feet, or double standard application rate). Seeding cannot generally be expected to grow up through this depth of mulch and will be smothered. If vegetation is desired, the mulch will need to be removed in the springtime and the area seeded and mulched.

Wood Chips or Bark:

- Wood chips or ground bark should be applied to a thickness of 2 to 6 inches.
- Wood chips or ground bark should be applied at a rate of 10 to 20 tons per acre or 460 to 920 pounds per 1,000 square feet.

Erosion Control Mix:

Erosion control mix can be manufactured on or off the project site. It must consist primarily of organic material, separated at the point of generation, and may include shredded bark, stump grindings, composted bark, or acceptable manufactured products. Wood and bark chips, ground construction debris or reprocessed wood products will not be acceptable as the organic component of the mix.

- Composition of the erosion control mix should be as follows:
    - Erosion control mix should contain a well-graded mixture of particle sizes and may contain rocks less than 4" in diameter. Erosion control mix must be free of refuse, physical contaminants, and material toxic to plant growth. The mix composition should meet the following standards:
    - The organic matter content should be between 25 and 65%, dry weight basis.
    - Particle size by weight should be 100% passing a 3" screen, 90% to 100% passing a 1-inch screen, 70% to 100% passing a 0.75-inch screen, and a maximum of 30% to 75%, passing a 0.25-inch screen.
    - The organic portion needs to be fibrous and elongated.
    - The mix should not contain silts, clays or fine sands.
    - Soluble salts content should be < 4.0 mmhos/cm.
    - The pH should be between 5.0 and 8.0.
- The barrier must be placed along a relatively level contour. It may be necessary to cut tall grasses or woody vegetation to avoid creating voids and bridges that would enable fines to wash under the barrier through the grass blades or plant stems.
- The barrier must be a minimum of 12" high, as measured on the uphill side of the barrier, and a minimum of two feet wide.

Erosion Control Blankets and Mats:

- Mats are manufactured combinations of mulch and netting designed to protect against erosion, and also to retain soil moisture and modify soil temperature. See further specifications under "Temporary Erosion Blankets."

TEMPORARY VEGETATION

General Description

Temporary vegetation consists of the establishment of a grass and legume cover on exposed soils for periods of up to 12 months. The purpose is to reduce erosion and sedimentation by stabilizing disturbed areas that will not be brought to final grade for a year or less and to reduce problems associated with mud and dust production from exposed soil surfaces during construction. Temporary seeding is also essential to preserve the integrity of earthen structures used to control sediment, such as diversions and the embankments of sediment basins.

Runoff and sheet erosion caused by splash erosion (raindrop impact on bare soil) is the source of most fine particles in sediment. To reduce the sediment load in runoff, the soil surface itself should be protected. The most effective and economical means of controlling sheet and rill erosion is to establish a vegetative cover. Annual plants that sprout rapidly and survive for only one growing season are suitable temporary vegetative cover.

Temporary vegetative cover should be applied where exposed soil surfaces will not be final graded within 45 days from initial disturbance. Such areas include excavated areas, soil stockpiles, berms, embankments and sides of sediment basins, temporary road banks, and other earthworks.

Considerations

- Proper seedbed preparation and the use of quality seed are important in this practice. Failure to carefully follow sound agronomic recommendations will often result in an inadequate stand of vegetation that provides little or no erosion control.

- Nutrients and pesticides used to establish and maintain vegetation must be managed to protect surface water and groundwater quality.
- Temporary seeding should be used extensively in sensitive areas (e.g., pond and lake watersheds, steep slopes, streambanks).
- Late fall seeding may fail, resulting in inadequate overwinter erosion protection, as well as potential surface stability problems associated with spring thaw and spring runoff events. If full stabilization is not achieved by late fall, other stabilization measures such as mulching should be implemented.

Maintenance Requirements

- Temporary seeding should be inspected weekly and after any rainfall exceeding ½ inch in 24 hours on active construction sites. Temporary seeding should also be inspected just prior to September 15, to ascertain whether additional seeding is required to provide stabilization over the winter period.
- Based on inspection, areas should be reseeded to achieve full stabilization of exposed soils. If it is too late in the planting season to apply additional seed, then other temporary stabilization measures should be implemented
- At a minimum, 85% of the soil surface should be covered by vegetation.
- If any evidence of erosion or sedimentation is apparent, repairs should be made and areas should be reseeded, with other temporary measures (e.g., mulch) used to provide erosion protection during the period of vegetation establishment.

Specifications

Site Preparation:

- Install needed erosion and sediment control measures such as siltation barriers, diversions, and sediment traps.
- Grade as needed for the access of equipment for seedbed preparation, seeding, mulch application, and mulch anchoring.
- Runoff should be diverted from the seeded area.
- On slopes 4:1 or steeper, the final preparation should include creating horizontal grooves perpendicular to the direction of the slope to catch seed and reduce runoff.

Seedbed Preparation:

- Stones and trash should be removed so as not to interfere with the seeding area.
- Where the soil has been compacted by construction operations, loosen soil to a depth of 2 inches before applying fertilizer, lime and seed.
- If applicable, fertilizer and organic soil amendments should be applied during the growing season.
    - Apply limestone and fertilizer according to soil test recommendations. If soil testing is not feasible on small or variable sites, or where timing is critical, fertilizer may be applied at the rate of 600 pounds per acre or 13.8 pounds per 1,000 square feet of low phosphate fertilizer[1] (N-P2O5-K2O) or equivalent. Apply limestone (equivalent to 50 percent calcium plus magnesium oxide) at a rate of 3 tons per acre (138 lb. per 1,000 square feet).

1 Low phosphate fertilizer is defined by the Comprehensive Shoreland Protection Act as less than 2% phosphorus. The University of New Hampshire Cooperative Extension has found through soil tests that NH's soils have ample phosphorus and recommend low phosphorus fertilizers with 0% - 1% phosphorus such as 3:1:3 or 10:0:10 N:P:K. They discourage the use of imbalanced fertilizers.

- Fertilizer should be restricted to a low phosphate, slow release[2] nitrogen fertilizer when applied to areas between 25 feet and 250 feet from a surface water body. No fertilizer except limestone should be applied within 25 feet of a surface water body. **These limitations are requirements for any water body protected by the Comprehensive Shoreland Protection Act.**

Seeding:

- Select seed from recommendations in Table 4-1.
- Apply seed uniformly by hand, cyclone seeder, drill, cultipacker type seeder or hydroseeder (slurry including seed and fertilizer). Normal seeding depth is from ¼ to ½ inch. Hydroseeding that includes mulch may be left on soil surface. Seeding rates must be increased 10 % when hydroseeding.
- Temporary seeding should typically occur prior to September 15th.
- Areas seeded between May 15th and August 15th should be covered with hay or straw mulch, according to the "Temporary and Permanent Mulching" practice.
- Vegetated growth covering at least 85% of the disturbed area should be achieved prior to October 15th. If this condition is not achieved, implement other temporary stabilization measures for overwinter protection.

2 Slow release fertilizers must be at least 50% slow release nitrogen components, which means that half of the nitrogen will not be immediately available. Typically, it takes 2-24 weeks for all slow-release nitrogen to become available. Slow-release fertilizers do not necessarily reduce nitrogen loading. Nitrogen fertilizers are necessary for grass lawns, however, according to the UNH Cooperative Extension, nitrogen fertilizers for lawns that consist of legume and clover are not necessary.

Table 4-1. Seeding Recommendations for Temporary Vegetation

Species	Per Acre bushels (BU) or pounds (lbs)	Per 1,000 ft^2	Remarks
Winter Rye	2 BU. or 112 lbs.	2.5 lbs.	Best for fall seeding. Seed from August 15 to September 15 for best cover. Seed to a depth of 1 inch.
Oats	2.5 BU. or 80 lbs.	2 lbs.	Best for spring seedings. Seed no later than May 15 for summer protection. Seed to a depth of 1 inch.
Annual Ryegrass	40 lbs.	1 lb.	Grows quickly, but is of short duration. Use where appearances are important. Seed early spring and/or between August 15 and September 15. Cover the seed with no more than 0.25 inch of soil.
Perennial Ryegrass	30 lbs.	0.7 lb.	Good cover which is longer lasting than annual ryegrass. Seed between April 1 and June 1 and/or between August 15 and September 15. Mulching will allow seeding throughout the growing season. Seed to a depth of approximately 0.5 inch.

Source: Minnick, E.L. and H.T. Marshall. (August 1992)

PERMANENT VEGETATION

General Description

Permanent vegetative cover should be established on disturbed areas where permanent, long-lived vegetative cover is needed to stabilize the soil, to reduce damages from sediment and runoff, and to enhance the environment.

Runoff and sheet erosion caused by splash erosion (raindrop impact on bare soil) is the source of most fine particles in sediment. To reduce the sediment load in runoff, the soil surface itself should be protected. The most effective and economical means of controlling sheet and rill erosion is to establish a vegetative cover.

Considerations

- Proper seedbed preparation and the use of quality seed are important in this practice. Failure to carefully follow sound agronomic recommendations will often result in an inadequate stand of vegetation that provides little or no erosion control.
- Nutrients and pesticides used to establish and maintain vegetation must be managed to protect surface water and groundwater quality.

Maintenance Requirements

- Permanent seeded areas should be inspected at least monthly during the course of construction. Inspections, maintenance, and corrective actions should continue until the owner assumes permanent operation of the site.
- Seeded areas should be mowed as required to maintain a healthy stand of vegetation, with mowing height and frequency dependent on type of grass cover.
- Based on inspection, areas should be reseeded to achieve full stabilization of exposed soils.

- At a minimum, 85% of the soil surface should be covered by vegetation.
- If any evidence of erosion or sedimentation is apparent, repairs should be made and areas should be reseeded, with other temporary measures (e.g., mulch) used to provide erosion protection during the period of vegetation establishment.

Specifications

Site Preparation:

- Install needed erosion and sediment control measures such as siltation barriers, diversions, and sediment traps.
- Grade as needed for the access of equipment for seedbed preparation, seeding, mulch application, and mulch anchoring.
- Runoff should be diverted from the seeded area.
- On slopes 4:1 or steeper, the final preparation should include creating horizontal grooves perpendicular to the direction of the slope to catch seed and reduce runoff.

Seedbed Preparation:

- Work lime and fertilizer into the soil as nearly as practical to a depth of 4 inches with a disc, spring tooth harrow or other suitable equipment. The final harrowing operation should be on the general contour. Continue tillage until a reasonably uniform, fine seedbed is prepared. All but clay or silty soils and coarse sands should be rolled to firm the seedbed wherever feasible.
- Remove from the surface all stones 2 inches or larger in any dimension. Remove all other debris, such as wire, cable, tree roots, concrete, clods, lumps, trash or other unsuitable material.
- Inspect seedbed just before seeding. If traffic has left the soil compacted; the area must be tilled and firmed as above.

- Where the soil has been compacted by construction operations, loosen soil to a depth of 2 inches before applying fertilizer, lime and seed.
- If applicable, fertilizer and organic soil amendments should be applied during the growing season.
    - Apply limestone and fertilizer according to soil test recommendations. If soil testing is not feasible on small or variable sites, or where timing is critical, fertilizer may be applied at the rate of 600 pounds per acre or 13.8 pounds per 1,000 square feet of low phosphate fertilizer[1] (N-P2O5-K2O) or equivalent. Apply limestone (equivalent to 50 percent calcium plus magnesium oxide) at a rate of 3 tons per acre (138 lb. per 1,000 square feet).
    - Fertilizer should be restricted to a low phosphate, slow release[2] nitrogen fertilizer when applied to areas between 25 feet and 250 feet from a surface water body. No fertilizer except limestone should be applied within 25 feet of the surface water. **These limitations are requirements for any water body protected by the Comprehensive Shoreland Protection Act.**

1 Low phosphorus fertilizer is defined by the Comprehensive Shoreland Protection Act as less than 2% phosphorus. The University of New Hampshire Cooperative Extension has found through soil tests that NH's soils have ample phosphorus and recommend low phosphorus fertilizers with 0% - 1% phosphorus such as 3:1:3 or 10:0:10 N:P:K. They discourage the use of imbalanced fertilizers.

2 Slow release fertilizers must be at least 50% slow release nitrogen component, which means that half of the nitrogen will not be immediately available. Typically, it takes 2-24 weeks for all slow-release nitrogen to become available. Slow-release fertilizers do not necessarily reduce nitrogen loading. Nitrogen fertilizers are necessary for grass lawns, however, according to the UNH Cooperative Extension, nitrogen fertilizers for lawns that consist of legume and clover are not necessary.

Seeding:

- Select a seed mixture in Table 4-2 that is appropriate for the soil type and moisture content as found at the site, for the amount of sun exposure and for level of use. Select seed from recommendations in Table 4-3.
- Inoculate all legume seed with the correct type and amount of inoculant.
- Apply seed uniformly by hand, cyclone seeder, drill, cultipacker type seeder or hydroseeder (slurry including seed and fertilizer). Normal seeding depth is from ¼ to ½ inch. Hydroseeding that includes mulch may be left on soil surface. Seeding operations should be on the contour.
- Where feasible, except where either a cultipacker type seeder or hydroseeder is used, the seedbed should be firmed following seeding operations with a roller, or light drag.
- Spring seeding usually gives the best results for all seed mixes or with legumes. Permanent seeding should be completed 45 days prior to the first killing frost. When crown vetch is seeded in later summer, at least 35% of the seed should be hard seed (unscarified). If seeding cannot be done within the specified seeding dates, mulch according to the "Temporary and Permanent Mulching practice," and delay seeding until the next recommended seeding period.
    - Temporary seeding should typically occur prior to September 15th.
    - Areas seeded between May 15th and August 15th should be covered with hay or straw mulch, according to the "Temporary and Permanent Mulching" practice.
- Vegetated growth covering at least 85% of the disturbed area should be achieved prior to October 15th. If this condition is not achieved, implement temporary stabilization measures for overwinter protection, and complete permanent seed stabilization during the next growing season.

Hydroseeding:

- When hydroseeding (hydraulic application), prepare the seedbed as specified above or by hand raking to loosen and smooth the soil and to remove surface stones larger than 2 inches in diameter.
- Slopes must be no steeper than 2 to 1 (2 feet horizontally to 1 foot vertically).
- Lime and fertilizer may be applied simultaneously with the seed. The use of fiber mulch on critical areas is not recommended (unless it is used to hold straw or hay). Better protection is gained by using straw mulch and holding it with adhesive materials or 500 pounds per acre of wood fiber mulch.
- Seeding rates must be increased 10% when hydroseeding.

Table 4-2. Seed Mixture Selection Based on Soil Type

Use	Seed Mixture See Table 4-3	Soil Drainage			
		Droughty	Well Drained	Moderately Well Drained	Poorly Drained
Steep cuts and fills, borrow and disposal areas	A	Fair	Good	Good	Fair
	B	Poor	Good	Fair	Fair
	C	Poor	Good	Excellent	Good
	D	Fair	Fair	Good	Excellent
	E	Fair	Excellent	Excellent	Poor
Waterways, emergency spillways, and other channels with flowing water	A	Good	Good	Good	Fair
	C	Good	Excellent	Excellent	Fair
	D	Good	Excellent	Excellent	Fair
Lightly used parking lots, odd areas, unused lands, and low intensity use recreation sites	A	Good	Good	Good	Fair
	B	Good	Good	Fair	Poor
	C	Good	Excellent	Excellent	Fair
	D	Fair	Good	Good	Excellent
Play areas and athletic fields. (Topsoil is essential for good turf.)	F	Fair	Excellent	Excellent	See Note 2
	G	Fair	Excellent	Excellent	See Note 2
Gravel pit	See source document for recommendations, or consult with USDA Natural Resource Conservation Service.				

Source: Minnick, E.L. and H.T. Marshall. (August 1992)

Note: Poorly drained soils are not desirable for use as playing areas and athletic fields.

Table 4-3. Seed Mixtures for Permanent Vegetation

Mixture	Species	Pounds Per Acre	Pounds Per 1,000 Sq. Ft.
A	Tall fescue	20	0.45
	Creeping red fescue	20	0.45
	Redtop	2	0.05
	Total	*42*	*0.95*
B[3]	Tall fescue	15	0.35
	Creeping red fescue	10	0.25
	Crown vetch	15	0.35
	or	-	-
	Flatpea	30	0.75
	Total	*40 or 55*	*0.95 or 1.35*
C[3]	Tall fescue	20	0.45
	Creeping red fescue	20	0.45
	Birdsfoot trefoil	8	0.20
	Total	*48*	*1.10*
D[3]	Birdsfoot trefoil	10	0.25
	Redtop	5	0.10
	Reed Canarygrass[1]	15	0.35
	Total	*30*	*0.70*
E	Tall fescue	20	0.45
	Flatpea	30	0.75
	Total	*50*	*1.20*
F	Creeping red fescue[2]	50	1.15
	Kentucky bluegrass[2]	50	1.15
	Total	*100*	*2.30*
G	Tall fescue[2]	*150*	*3.60*

Table 4-3 Source: Minnick, E.L. and H.T. Marshall. (August 1992)

Notes:

1. Reed canary grass is on the invasive species watch list due to its rapid, aggressive growth and its ability to move into wetlands and out-compete other desirable wetland plants. Caution should be used when planted near wetlands.
2. For heavy use athletic fields, consult the University of New Hampshire Cooperative Extension Turf Specialist for current varieties and seeding rates.
3. The University of New Hampshire Cooperative Extension recommends red clover to substitute for crown vetch or birdsfoot trefoil if they are going to be mowed to a height of 4 inches or less. Red clover (Alsike variety) should be seeded at a rate of 20 pounds per acre.

TEMPORARY EROSION CONTROL BLANKET

General Description

Erosion control blankets or mats consist of protective manufactured mulch blankets, installed on prepared soil surfaces to provide erosion protection and surface stability on steep slopes, vegetated channels, or shorelines during vegetation establishment.

Erosion control blankets temporarily stabilize and protect disturbed soil from raindrop impact and surface erosion. Like other types of mulch, the blankets help increase infiltration, decrease compaction and soil crusting, and conserve soil moisture. Erosion control blankets increase the germination rates for grasses and legumes and promote vegetation establishment. Erosion control blankets also protect seeds from predators and reduce desiccation and evaporation by insulating the soil and seed environment.

Erosion control blankets generally consist of machine-made mats made of organic, biodegradable mulch such as straw, curled wood fiber (excelsior), coconut fiber or a combination thereof, evenly distributed on or between manufactured netting. Netting is typically composed of photodegradable polypropylene or biodegradable natural fiber. The blankets are provided in rolls for ease of handling and installation.

Note: This erosion control practice as described in this manual does not cover the selection and installation of turf reinforcement products. If such products are used on-site, they must be included in the project plans, designed by a professional engineer registered in New Hampshire, and included in permit approvals.

Considerations

Erosion control blankets can be applied to steep slopes, vegetated waterways, and other areas sensitive to erosion, to supplement vegetation during initial establishment and help provide for safe conveyance of runoff over the protected surface.

- During the growing season (April 15 - September 15) use mats (or mulch and netting) on:
  - The base of grassed waterways
  - Steep slopes (15% or greater)
  - Any disturbed soil within 100 feet of lakes, streams and wetlands
- During the late fall and winter (September 15 - April 15) use heavy grade mats on all areas noted above plus use lighter grade mats (or mulch and netting) on:
  - Side slopes of grassed waterways
  - Moderate slopes (greater than 8%) There may be cases where mats will be needed on slopes flatter than 8%, depending on site conditions and the length of the slope.
- The most critical aspect of installing mats is obtaining firm continuous contact between the mat and the soil. Without such contact, the mat is useless and erosion occurs.
- Install mats and staple in accordance with the manufacturer's recommendations.
- The designer must exercise care to choose the type of blanket or matting which is appropriate for the specific objectives and site conditions of the project. There are many soil stabilization products available, and a thorough review by an engineer or erosion control professional is necessary to evaluate the advantages, disadvantages, and construction requirements of the manufactured products, and to select and specify a product for a particular application.

Maintenance Requirements

- All blanket and mats should be inspected weekly during the construction period, and after any rainfall event exceeding ½ inch in a 24-hour period.
- Any failure should be repaired immediately. If washout of the slope, displacement of the mat, or damage to the mat occurs, the affected slope shall be repaired and reseeded, and the affected area of mat shall be re-installed or replaced.

Specifications

Site Preparation:

Proper site preparation is essential to ensure complete contact of the protection matting with the soil.

- Grade and shape area of installation.
- Remove all rocks, clods, trash, vegetative or other obstructions so that the installed blankets will have direct contact with the soil.
- Prepare seedbed by loosening 2-3 inches of topsoil above final grade.
- Incorporate amendments, such as lime and fertilizer, into soil according to soil test and the seeding plan.

Seeding:

- Seed area before blanket installation for erosion control and re-vegetation. Seeding after mat installation is often specified for turf reinforcement application. When seeding prior to blanket installation, all check slots and other areas disturbed during installation must be reseeded.
- Where soil filling is specified, seed the matting and the entire disturbed area after installation and prior to filling the mat with soil.

Installing and Anchoring Blankets:

- **Blankets shall be installed and anchored per the manufacturer's specifications. If the manufacturer's instructions differ from those listed below, the manufacturer's instructions should be followed.**
- Blankets shall be placed within 24 hours after sowing seed in that area.
- U-shaped wire staples, metal geotextile stake pins, or triangular wooden stakes can be used to anchor mats to the ground surface.
    - Wire staples should be a minimum gauge as specified by the manufacturer.
    - Metal stake pins should be 3/16-inch diameter steel with a 1 1/2 inch steel washer at the head of the pin, or as specified by the manufacturer.
- Wire staples and metal stakes should be driven flush to the soil surface. All anchors should have sufficient ground penetration to resist pullout. Longer anchors may be required for loose soils.

Installation on Slopes:

- **Blankets shall be installed on slopes per the manufacturer's specifications. If the manufacturer's instructions differ from those listed below, the manufacturer's instructions should be followed.**
- Blankets shall be laid loosely over the soils, maintaining contact with the soil, and not stretched.
- Blankets shall be anchored at the top of the slope in a trench to prevent runoff from undermining the mat. Subsequent mats should be overlapped by the upslope mat. Backfill trench and tamp earth firmly.

- Blankets shall be unrolled in the direction of the water flow, overlapping the edges by a minimum of 4 inches and stapling the edges, as directed by the manufacturer.
- When blankets must be spliced, place blankets end over end (shingle style) with 6-inch minimum overlap. Staple through overlapped area, approximately 12 inches apart, or as specified by manufacturer.
- Lay blankets loosely and maintain direct contact with the soil - do not stretch.
- Blankets shall be stapled sufficiently to anchor blanket and maintain contact with the soil. Staples shall be placed down the center and staggered with the staples placed along the edges. Stapling pattern and number of staples will depend on steepness of slope and manufacturer's anchoring methods; follow manufacturer's instructions.

Installation in Channels:

- **Blankets shall be installed in channels per the manufacturer's specifications. If the manufacturer's instructions differ from those listed below, the manufacturer's instructions should be followed.**
- Dig initial anchor trench across the channel at the lower end of the project area.
- Excavate intermittent check slots, across the channel at 25-30 foot intervals along the channel, or as specified by manufacturer.
- Cut longitudinal channel anchor slots along each side of the installation to bury edges of matting. Whenever possible extend matting 2-3 inches above the crest of channel side slopes.
- Beginning at the downstream end and in the center of the channel, place the initial end of the first roll in the anchor trench and secure with fastening devices, as directed by the manufacturer. Note: matting will initially be upside down in anchor trench.

- In the same manner, position adjacent rolls in anchor trench, overlapping the preceding roll a minimum of 3 inches.
- Secure these initial ends of mats with anchors at manufacturer's specified intervals, backfill and compact soil.
- Unroll center strip of matting upstream. Stop at next check slot or terminal anchor trench.
- Unroll adjacent mats upstream in similar fashion, maintaining a 3-inch minimum overlap.
- Fold and secure all rolls of matting snugly into all transverse check slots. Lay mat in the bottom of the slot then fold back against itself. Anchor through both layers of mat at manufacturer's specified intervals, then backfill and compact soil. Continue rolling all mat widths upstream to the next check slot or terminal anchor trench.
- Alternate method for noncritical installations: place two rows of anchors on 6-inch centers at 25-30 feet intervals in lieu of excavated check slots.
- Shingle-lap spliced ends by a minimum of 1 foot with upstream mat on top to prevent uplifting by water or begin new rolls in a check slot. Anchor overlapped area by placing two rows of anchors, 1 foot apart on 1-foot intervals.
- Place edges of outside mats in previously excavated longitudinal slots, anchor using prescribed staple pattern, backfill and compact soil.
- Anchor, fill and compact upstream end of mat in a terminal trench, as directed by manufacturer.
- Secure mat to ground surface using U-shaped wire staples, geotextile pins, wooden stakes, or other anchors as recommended by the manufacturer.

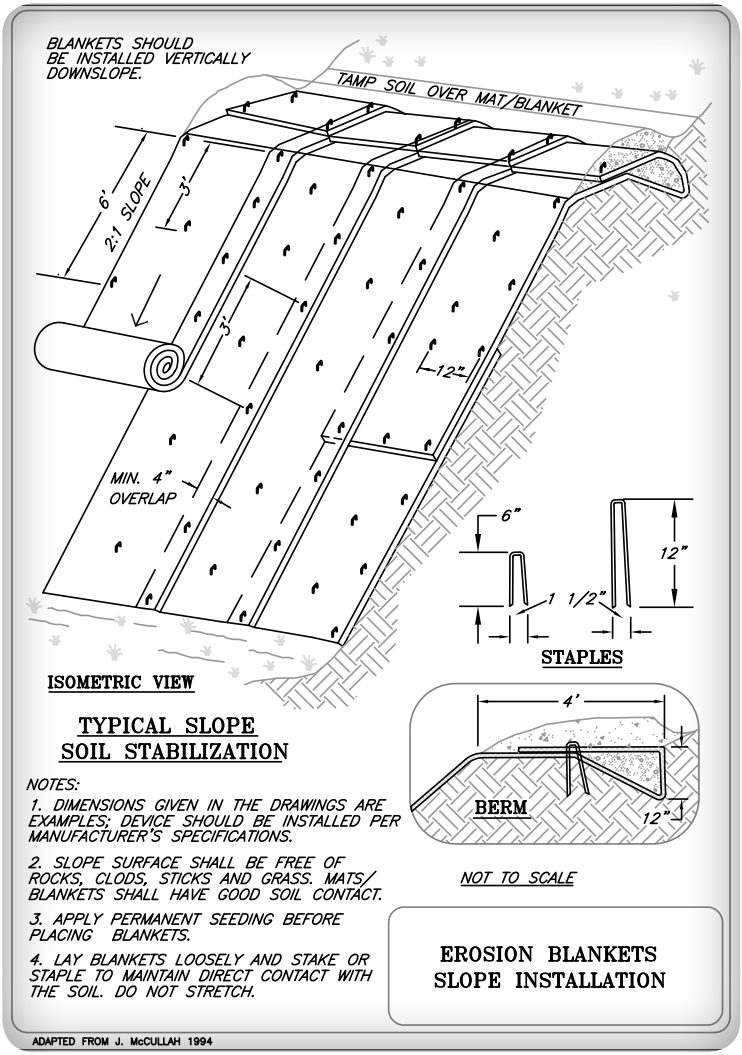
BLANKETS SHOULD BE INSTALLED VERTICALLY DOWNSLOPE.
TAMP SOIL OVER MAT/BLANKET
6'
2:1 SLOPE
3'
3'
12"
MIN. 4" OVERLAP
ISOMETRIC VIEW
TYPICAL SLOPE SOIL STABILIZATION
6"
12"
1 1/2"
STAPLES
4'
BERM
12"
NOT TO SCALE
NOTES:
1. DIMENSIONS GIVEN IN THE DRAWINGS ARE EXAMPLES; DEVICE SHOULD BE INSTALLED PER MANUFACTURER'S SPECIFICATIONS.
2. SLOPE SURFACE SHALL BE FREE OF ROCKS, CLODS, STICKS AND GRASS. MATS/ BLANKETS SHALL HAVE GOOD SOIL CONTACT.
3. APPLY PERMANENT SEEDING BEFORE PLACING BLANKETS.
4. LAY BLANKETS LOOSELY AND STAKE OR STAPLE TO MAINTAIN DIRECT CONTACT WITH THE SOIL. DO NOT STRETCH.
EROSION BLANKETS SLOPE INSTALLATION
ADAPTED FROM J. McCULLAH 1994

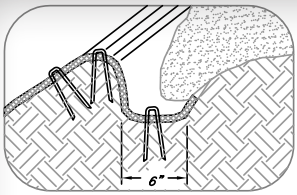

LONGITUDINAL ANCHOR TRENCH

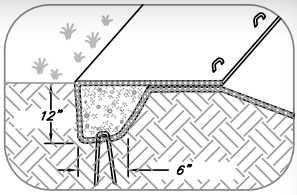

TERMINAL SLOPE AND CHANNEL ANCHOR TRENCH

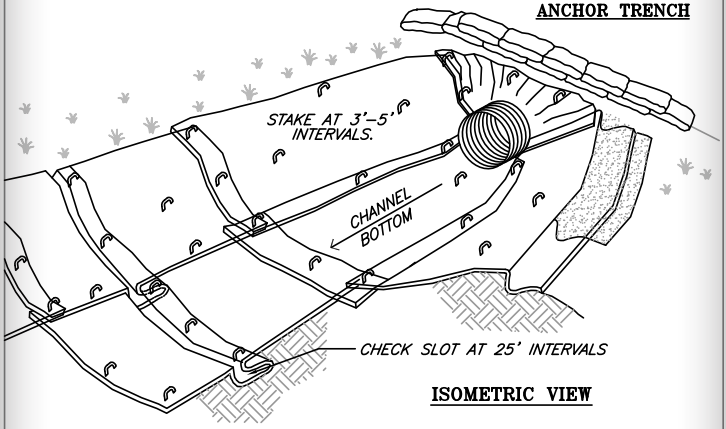

ISOMETRIC VIEW

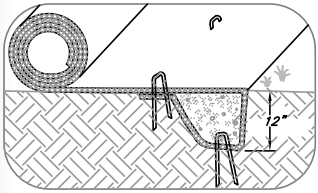

INITIAL CHANNEL ANCHOR TRENCH

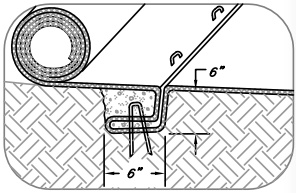

INTERMITTENT CHECK SLOT

NOTES:

1. DIMENSIONS GIVEN IN THE DRAWINGS ARE EXAMPLES; DEVICE SHOULD BE INSTALLED PER MANUFACTURER'S SPECIFICATIONS.
2. CHECK SLOTS TO BE CONSTRUCTED PER MANUFACTURER'S SPECIFICATIONS.
3. STAKING OR STAPLING LAYOUT PER MANUFACTURER'S SPECIFICATIONS.

EROSION BLANKETS
CHANNEL INSTALLATION

ADAPTED FROM J. McCULLAH 1994

DIVERSION

General Description

A diversion is a temporary channel constructed across the slope to intercept runoff and direct it to a stable outlet or to sediment trapping facilities. The channel may be formed by excavation, placement of a berm (or dike), or a combination of these measures. This temporary measure is used immediately above a new cut or soil fill slope or around the perimeter of a disturbed area. Diversions can be used as follows:

- To divert storm runoff from upslope drainage areas away from unprotected disturbed areas and slopes to a stabilized outlet. In this case, the diversion is placed upslope of the construction area.
- To divert sediment-laden runoff from a disturbed area to a sediment-trapping facility such as a sediment trap or sediment basin. In this case, the diversion is placed below the disturbed area, to assure that sediment-laden runoff will not leave the site without treatment.

Diversions are intended to facilitate management of the site during construction, and should not be substituted for terracing, vegetated waterways, permanent land grading practices, and other permanent measures for providing long-term erosion control.

Considerations

- Temporary diversions must be stabilized immediately following installation to prevent erosion of the diversion itself.
- The gradient along the flow path must have a positive grade to assure drainage, but should not be so steep as to result in erosion due to high velocity channel flow. If such erosion occurs during construction, corrective action should be taken to stabilize the channel and berm, flatten the gradient of the channel, or otherwise eliminate the cause of erosion.

- Diversions are typically installed using material available on the site and can usually be constructed with equipment needed for site grading. The useful life of the practice can be extended by stabilizing the dike with vegetation.
- Temporary diversion dikes are often used as a perimeter control in association with a sediment trap or a sediment basin, or a series of sediment-trapping facilities, on moderate to large construction sites. If installed properly and in the first phase of grading, maintenance costs are very low.
- Diversions that are located upslope of a construction area should not themselves be located below high sediment-producing areas unless land treatment practices or structural measures, designed to prevent damaging accumulations of sediment in the channels, are installed with or before the diversions. (The exception is where the diversion is used to divert sediment-laden water to a sedimentation facility.)
- Where diversions carry concentrated flows, their outlets may require treatment or structures to dissipate energy and re-disperse the flow or re-create sheet flow into undisturbed upland areas, where the runoff can be absorbed. Untreated, sediment-laden runoff should not be discharged to such undisturbed areas.

Maintenance Requirements

The measure should be inspected weekly and after every storm of ½ inch or more in a 24-hour period. Repairs should be made to the berm (dike), flow channel, outlet or sediment trapping facility, as necessary.

Diversion Dikes used to trap sediment should be inspected and cleaned out after every significant storm.

Damages caused by construction traffic or other activity must be repaired before the end of each working day.

If inspection indicates vegetation has not been established or has been damaged, the affected areas must be reseeded immediately.

Once diversions have been stabilized, they should be mowed periodically to maintain a healthy vegetative cover, but the grass should not be cut shorter than 4 inches. Diversion ridges can be hazardous to mow, and equipment operators should be made aware of this potential hazard.

Specifications

Design Specifications:

Diversions should be designed to meet the criteria in the following table:

Design Parameter	Criteria
Location	The condition of the outlet area, site topography, ground cover, soil type, and length of slope should determine the location of the diversion.
Drainage Area	< 5 acres
Capacity	2-year, 24 hour design storm conveyance capacity
Design Velocity	2.5 to 4.5 feet/sec, depending on channel lining
Berm or channel side slope	2:1 or flatter
Berm top width	2 feet, minimum
Total depth, top of berm to bottom of channel	1.5 feet maximum, except for berm overfill of approximately 10% of berm height to allow for settlement.
Freeboard	0.5 feet minimum
Channel shape	Parabolic or trapezoidal
Stabilization	Vegetation or riprap
Gradient (along flow path)	Positive grade to outlet. Channels < 2% do not require stabilization unless excessive erosion is observed during routine inspection. Channels > 2% should be stabilized.

Design Parameter	Criteria
Outlet	Sediment laden water must be diverted into sediment trap or sediment basin. Runoff from undisturbed areas must discharge at either a naturally stable outlet, or a stabilized level spreader, apron, or other suitable structure.

Construction Specifications:

- Temporary diversion dikes should be installed as an initial step in the land-disturbing activity. They must be functional prior to exposure of soils in the area being served by the diversion.
- All ditches or gullies within the limits of the diversion should be filled, and trees and other obstructions should be removed before or as part of the construction.
- The dike should be located to minimize damages by construction operations and traffic.
- Where the diversion crosses an underground utility or other structure, measures should be employed to prevent damage to the utility, and to prevent settlement or displacement of trench backfill as a result of the placement of the diversion.
- Once soil is exposed for a diversion channel, it should be immediately shaped, graded and stabilized. The dike should be adequately compacted to prevent failure.
- Temporary or permanent seeding and mulch should be applied to the dike immediately following its construction.
- Diversions must be completely stabilized prior to directing runoff to them.
- Where vegetation is used for stabilization, disturbed areas should be established to grass immediately after construction. Seedbed preparation, seeding, fertilizing, and mulching should comply with Temporary Vegetation and Permanent Vegetation practices described in this manual.

- If the soils or winter conditions preclude the use of vegetation and protection is needed, nonvegetative means, such as erosion control mats or a graded stone lining may be used.
- Each diversion must have an adequate outlet. The outlet must convey runoff to a point where outflow will not cause damage. The outlet should be installed and stabilized before the construction of the diversion.

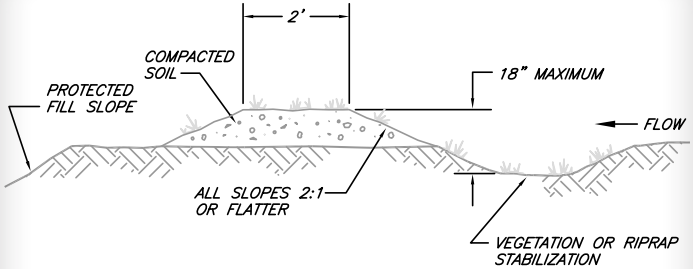

TYPICAL FILL DIVERSION

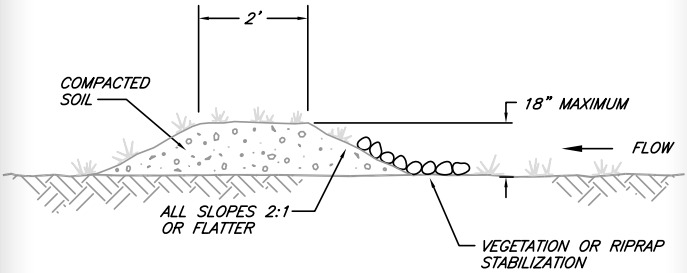

TYPICAL TEMPORARY DIVERSION DIKE

NOTES:
1. THE CHANNEL BEHIND THE DIKE SHALL HAVE POSITIVE GRADE TO A STABILIZED OUTLET.
2. THE DIKE SHALL BE ADEQUATELY COMPACTED TO PREVENT FAILURE.
3. THE DIKE SHALL BE STABILIZED WITH TEMPORARY OR PERMANENT SEEDING OR RIPRAP.

TEMPORARY DIVERSION

ADAPTED FROM J. McCULLAH 1994

SLOPE DRAIN

General Description

A slope drain comprises a pipe, flexible tubing, or other conduit extending from the top to the bottom of a cut or fill slope. During construction, cut and fill slopes are exposed to erosion between the time they are graded and permanently stabilized. During this period, the slopes are very vulnerable to erosion, and temporary slope drains together with temporary diversions can provide valuable protection. The temporary conduit safely conveys runoff down the disturbed face of an embankment without causing erosion. The practice is maintained until the slope has been sufficiently stabilized to enable it to convey runoff by sheet flow or until another practice has been installed to convey concentrated runoff from the top of slope to a safe outlet.

Considerations

Slope drains must be sized, installed, and maintained properly, because their failure will usually result in severe erosion of the slope. Care must be taken to size, install, and maintain the conduit inlet and contributing diversion channel, to prevent failure from overtopping due to inadequate inlet capacity and lack of maintenance of diversion channel capacity and ridge height.

The entrance section to the drain should be well-entrenched and stable so that surface water can enter freely. The drain should extend downslope beyond the toe of the slope to a stable area or appropriately stabilized outlet.

The maximum drainage area per drain should be relatively small and much less than 5 acres.

Maintenance Requirements

- The slope drain structure should be inspected weekly, and after every storm exceeding ½ inch in a 24-hour period. Repairs should be made as necessary.
- The entrance and outlet should be kept clear of sediment and debris. Any scour at the outlet should be repaired immediately, and the outlet stabilized against further erosion.
- The contractor should prevent construction traffic over the slope drain.
- The contractor should avoid the placement of any material on the drain conduit, other than material used to anchor it in place.
- Upon stabilization of the slope, the slope drain should be removed, materials properly disposed, and the disturbed areas stabilized.

Specifications

Site Preparation:

- The slope drain should consist of heavy-duty flexible material designed for this purpose. The segment of drain located on the slope may consist of a sewn geotextile "sock" fabricated for this purpose, or sections of corrugated plastic or corrugated metal pipe.
- The diameter of the slope drain should be the same over its entire length.
- For fabric down drains or open-top chutes, install reinforced, hold-down grommets or stakes to anchor the conduit at intervals not to exceed 10 feet, with the outlet end securely fastened in place.
- CMP or corrugated plastic pipe must have at least one (1) anchor assembly for every 20 feet of slope drain.
- The conduit must extend beyond the toe of the slope.

- Slope drains should be sized according to the following table:

Drainage Area (Acres)	Pipe Diameter, D (Inches)
0.5	12
1.5	18
2.5	21
3.5	24
5.0	30

- The entrance to the slope drain should consist of a standard NHDOT Flared End-Section for Metal Pipe Culverts. A standard T-section fitting may also be used at the inlet, as indicated in the example drawing. An open top flared inlet for overside drain may also be used.
- Extension collars should consist of 12-inch long corrugated metal or corrugated plastic pipe, as required by the type of pipe used on the project. Watertight fittings should be provided.
- An earthen dike should be used to direct stormwater runoff into the temporary slope drain and should be constructed according to the Diversion practice described in this manual.
- The height of the dike at the centerline of the inlet should be equal to the diameter of the pipe (D) plus 12 inches or the height of the diversion dike, whichever is greater. Where the inlet dike height is greater than 18 inches, it should be sloped at the rate of 3:1 or flatter to connect with the adjacent diversion dike.
- The outlet of the slope drain should be protected from erosion by a riprap apron or other accepted practice for energy dissipation and scour protection.

Construction Specifications:

The failure of slope drains is frequently caused by water saturating the soil at the inlet and pipe joints, and then seeping along the outside of the pipe. Proper backfill and compaction at the inlet and

around and under the pipe haunches with stable soil material is essential to prevent this type of failure.

- Place slope drains on undisturbed soil or well-compacted fill at locations and elevations shown on the plans.
- The temporary slope drain should be placed on undisturbed soil or well-compacted fill.
- The entrance section should slope toward the slope drain at the minimum gradient of 1/2 inch per foot.
- The slope of down drain should be at least 5% to minimize sediment deposition within the conduit.
- The maximum slope of down drain should be 1.5:1.
- The soil around and under the entrance section should be hand-tamped in 6-inch lifts to the top of the dike to prevent seepage failure around the inlet.
- Ensure that fill over the drain at the top of the slope has a minimum depth of 12 inches above top of pipe, and a minimum top width of 4 feet. The sides should have a 3:1 slope.
- Ensure that the settled, compacted dike ridge is no less than 1 foot higher than the top of the pipe inlet.
- Securely fasten the exposed section of the drain with grommets or stakes spaced at the specified intervals.
- The slope drain sections should be securely fastened together and have watertight fittings.
- Extend the drain beyond the toe of the slope and adequately protect the outlet from erosion.
- Installation of temporary slope drains should be completed and their outlets protected before runoff is diverted to them.
- Immediately stabilize all disturbed areas following construction of the slope drain.

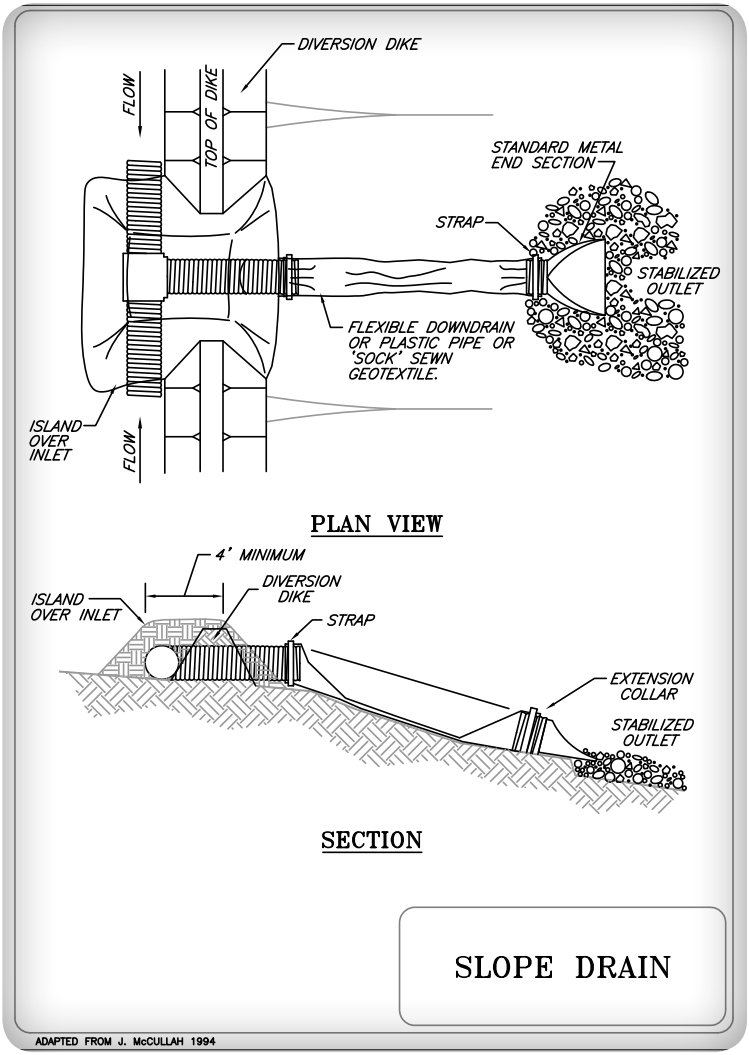
DIVERSION DIKE
FLOW
TOP OF DIKE
STANDARD METAL END SECTION
STRAP
STABILIZED OUTLET
FLEXIBLE DOWNDRAIN OR PLASTIC PIPE OR 'SOCK' SEWN GEOTEXTILE.
ISLAND OVER INLET
FLOW
PLAN VIEW
4' MINIMUM
DIVERSION DIKE
ISLAND OVER INLET
STRAP
EXTENSION COLLAR
STABILIZED OUTLET
SECTION
SLOPE DRAIN
ADAPTED FROM J. McCULLAH 1994

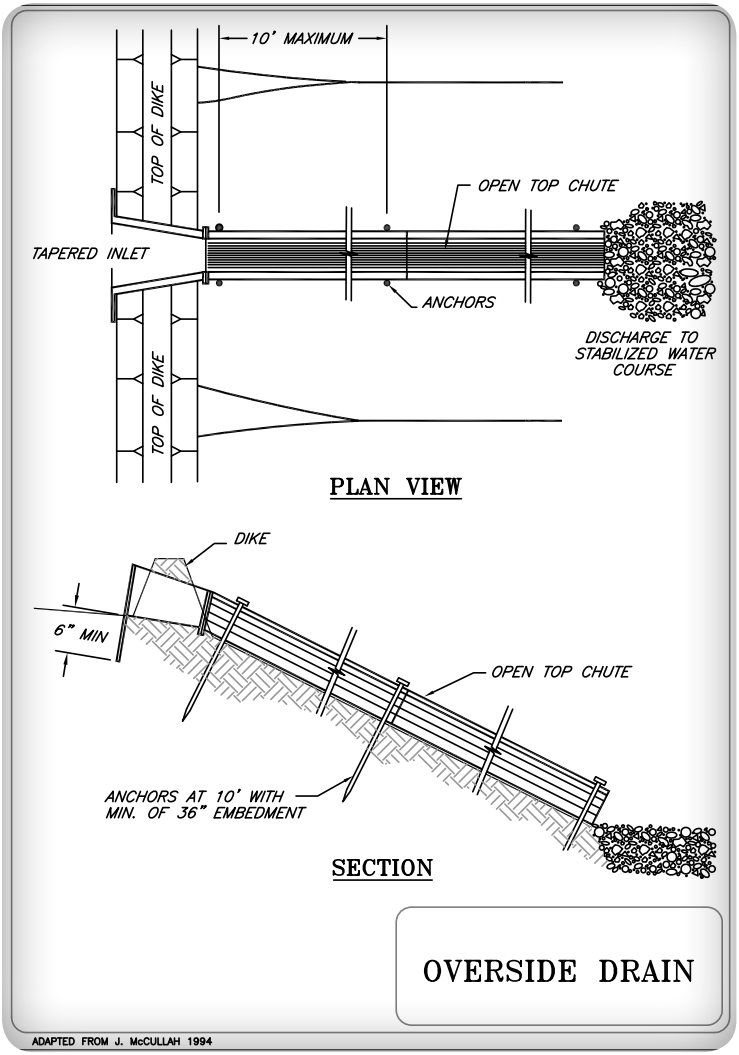
10' MAXIMUM
TOP OF DIKE
OPEN TOP CHUTE
TAPERED INLET
ANCHORS
DISCHARGE TO STABILIZED WATER COURSE
TOP OF DIKE
PLAN VIEW
DIKE
6" MIN
OPEN TOP CHUTE
ANCHORS AT 10' WITH MIN. OF 36" EMBEDMENT
SECTION
OVERSIDE DRAIN
ADAPTED FROM J. McCULLAH 1994