## 4-2. Sediment Control Practices

The following Sediment Control practices are presented in this Section:

- Silt fence
- Straw or hay bale barrier
- Erosion control mix berms
- Temporary check dam
- Temporary storm drain inlet protection
- Temporary construction exit
- Temporary sediment trap
- Temporary sediment basin
- Construction dewatering
- Flocculants

# SILT FENCE

## General Description

Silt fence is a temporary sediment barrier consisting of filter fabric attached to supporting posts and entrenched into the soil. This barrier is installed across or at the toe of a slope, to intercept and retain small amounts of sediment from disturbed or unprotected areas.

Silt fences have a useful life of one season. They function primarily to slow and pond the water and allow soil particles to settle. Silt fences are not designed to withstand high heads of water, and therefore should be located where only shallow pools can form. Their use is limited to areas where overland sheet flows are expected.

Silt fence is a sediment control practice, not an erosion control practice. It is intended to be used in conjunction with other practices that do prevent or control erosion. Improperly applied or installed silt fence will increase erosion.

***Silt fences should not be used across streams, channels, swales, ditches or other drainage ways.*** Silt fences are not capable of effectively filtering the high rates and volumes of water associated with channelized flow. Silt fences should not be designed to impound sediment or water more than 18 inches high. Silt fences installed across a concentrated flow path are subject to undercutting, end cutting, and overtopping. This frequently not only results in the bypass of sediment laden-water, but also in the complete failure of the fence. Such failures typically release the sediment accumulated on the upgradient side of the fence, and severe erosion of the channel both upstream and downstream of the fence.

## Considerations

- Silt fence barriers are used where:
  - Flow to the silt fence from a disturbed area occurs as overland sheet flow.
  - Sedimentation can pollute or degrade adjacent wetlands or watercourses.
  - Sedimentation will reduce the capacity of storm drainage systems or adversely affect adjacent areas.
  - The contributing drainage area is less than 1/4 acre per 100 feet of barrier length, the maximum length of slope above the barrier is 100 feet, and the maximum gradient behind the barrier is 50 percent (2:1). If any of these conditions are exceeded, other measures may be necessary to control erosion and to intercept and treat the sediment load.
  - Sediment barriers should not be used in areas of concentrated flows. Under no circumstances should silt fences be constructed in streams or in swales where there is the possibility of a washout.
- Silt fences (synthetic filter) can be used for 60 days or longer depending on ultraviolet stability and manufacturer's recommendations. However, silt fences generally have a useful life of one season, and should be periodically replaced on longer duration construction projects.
- Silt fencing generally is a better barrier than hay bale barriers.
- Potential causes of silt fence failure include:
  - Improper placement on the site;
  - Allowing excessive drainage area to the silt fence structure;
  - Inadequate trenching depth and improper backfill and compaction of the bottom of the silt fence fabric;
  - Improper attachment to posts;
  - Inadequate maintenance of the silt fence after installation;

- Installing silt fence with a descending grade along the fence alignment, resulting in the diversion or concentration of runoff.
- Placement of fence at mid-slope of a cut or fill embankment. Because a silt fence works by impounding water, it should be placed at the toe of such slopes, to allow for this function, and to avoid potential diversion or concentration of flows.

## Maintenance Requirements

- Fences should be inspected and maintained immediately after each rainfall and at least daily during prolonged rainfall;
- Sediment deposition should be removed, at a minimum, when deposition accumulates to one-half the height of the fence, and moved to an appropriate location so the sediment is not readily transported back toward the silt fence.
- Silt fences should be repaired immediately if there are any signs of erosion or sedimentation below them. If there are signs of undercutting at the center or the edges of the barrier, or impounding of large volumes of water behind them, sediment barriers should be replaced with a temporary check dam.
- Should the fabric on a silt fence decompose or become ineffective prior to the end of the expected usable life and the barrier still is necessary, the fabric should be replaced promptly.
- Any sediment deposits remaining in place after the silt fence is no longer required should be dressed to conform to the existing grade, prepared and seeded.
- If there is evidence of end flow on properly installed barriers, extend barriers uphill or consider replacing them with other measures, such as temporary diversions and sediment traps.
- Silt fences have a useful life of one season. On longer construction projects, silt fence should be replaced periodically as required to maintain effectiveness.

## Specifications

Fences should be used in areas where erosion will occur only in the form of sheet erosion and there is no concentration of water in a channel or drainage way above the fence. Sediment barriers should be installed prior to any soil disturbance of the contributing drainage area above them.

- The maximum contributing drainage area above the fence should be less than ¼ acre per 100 linear feet of fence;
- The maximum length of slope above the fence should be 100 feet;
- The maximum slope above the fence should be 2:1;
- Fences should be installed following the contour of the land as closely as possible, and
    - The ends of the fence should be flared upslope;
    - The fabric should be embedded a minimum of 4 inches in depth and 4 inches in width in a trench excavated into the ground, or if site conditions include frozen ground, ledge, or the presence of heavy roots, the base of the fabric should be embedded with a minimum thickness of 8 inches of ¾-inch stone;
    - The soil should be compacted over the embedded fabric;
    - Support posts should be sized and anchored according to the manufacturer's instructions with maximum post spacing of 6 feet;
    - Adjoining sections of the fence should be overlapped by a minimum of 6 inches (24 inches is preferred), folded and stapled to a support post. If metal posts are used, fabric should be wire-tied directly to the posts with three diagonal ties.
- Silt fencing should not be stapled or nailed to trees.
- The filter fabric should be a pervious sheet of propylene, nylon, polyester or ethylene yarn and should be certified by the manufacturer or supplier.

- The filter fabric should contain ultraviolet ray inhibitors and stabilizers to provide a minimum of 6 months of expected usable construction life at a temperature range of 0 degrees Fahrenheit to 120 degrees Fahrenheit.
- Posts for silt fences should be either 4-inch diameter wood or 1.33 pounds per linear foot steel with a minimum length of 5 feet. Steel posts should have projections for fastening wire to them. Posts should be placed on the downslope side of the fabric.
- The height of a silt fence should not exceed 36 inches as higher fences may impound volumes of water sufficient to cause failure of the structure.
- The filter fabric should be purchased in a continuous roll cut to the length of the barrier to avoid the use of joints. When joints are necessary, filter cloth should be spliced together only at support post, with a minimum 6-inch overlap, and securely sealed.
- A manufactured silt fence system with integral posts may be used.
- Post spacing should not exceed 6 feet.
- A trench should be excavated approximately 4 inches wide and 4 inches deep along the line of posts and upgradient from the barrier.
- The standard strength of filter fabric should be stapled or wired to the post, and 8 inches of the fabric should be extended into the trench. The fabric should not extend more than 36 inches above the original ground surface.
- The trench should be backfilled and the soil compacted over the filter fabric.
- Silt fence may be installed by “slicing” using mechanical equipment specifically designed for this procedure. The slicing method uses an implement towed behind a tractor to “plow” or slice the silt fence material into the soil. The slicing method minimally disrupts the soil upward and slightly displaces the

soil, maintaining the soil's profile and creating an optimal condition for subsequent mechanical compaction.

- Silt fences should be installed with "smiles" or "J-hooks" to reduce the drainage area that any segment will impound (see diagrams).
- The ends of the fence should be turned uphill.
- Silt fences placed at the toe of a slope should be set at least 6 feet from the toe to allow space for shallow ponding and to allow for maintenance access without disturbing the slope.
- Silt fences should be removed when they have served their useful purpose, but not before the upslope areas have been permanently stabilized.

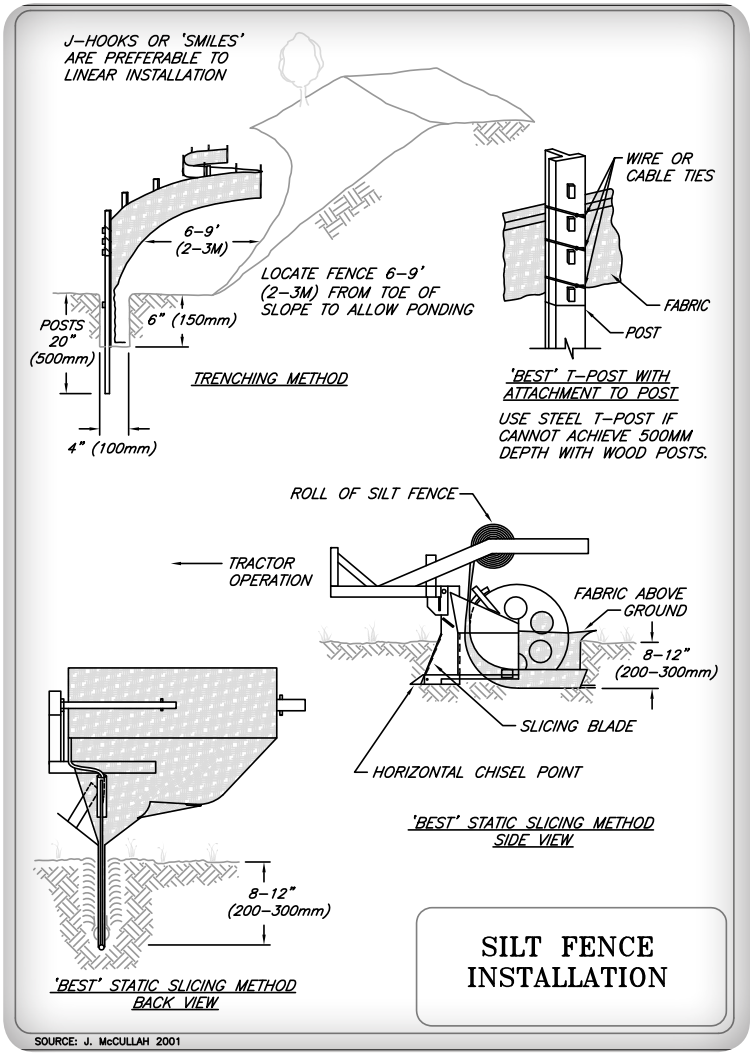
J–HOOKS OR 'SMILES' ARE PREFERABLE TO LINEAR INSTALLATION
6–9' (2–3M)
LOCATE FENCE 6–9' (2–3M) FROM TOE OF SLOPE TO ALLOW PONDING
POSTS 20" (500mm)
6" (150mm)
TRENCHING METHOD
4" (100mm)
WIRE OR CABLE TIES
FABRIC
POST
'BEST' T–POST WITH ATTACHMENT TO POST
USE STEEL T–POST IF CANNOT ACHIEVE 500MM DEPTH WITH WOOD POSTS.
ROLL OF SILT FENCE
TRACTOR OPERATION
FABRIC ABOVE GROUND
8–12" (200–300mm)
SLICING BLADE
HORIZONTAL CHISEL POINT
'BEST' STATIC SLICING METHOD SIDE VIEW
8–12" (200–300mm)
'BEST' STATIC SLICING METHOD BACK VIEW
SILT FENCE INSTALLATION
SOURCE: J. McCULLAH 2001

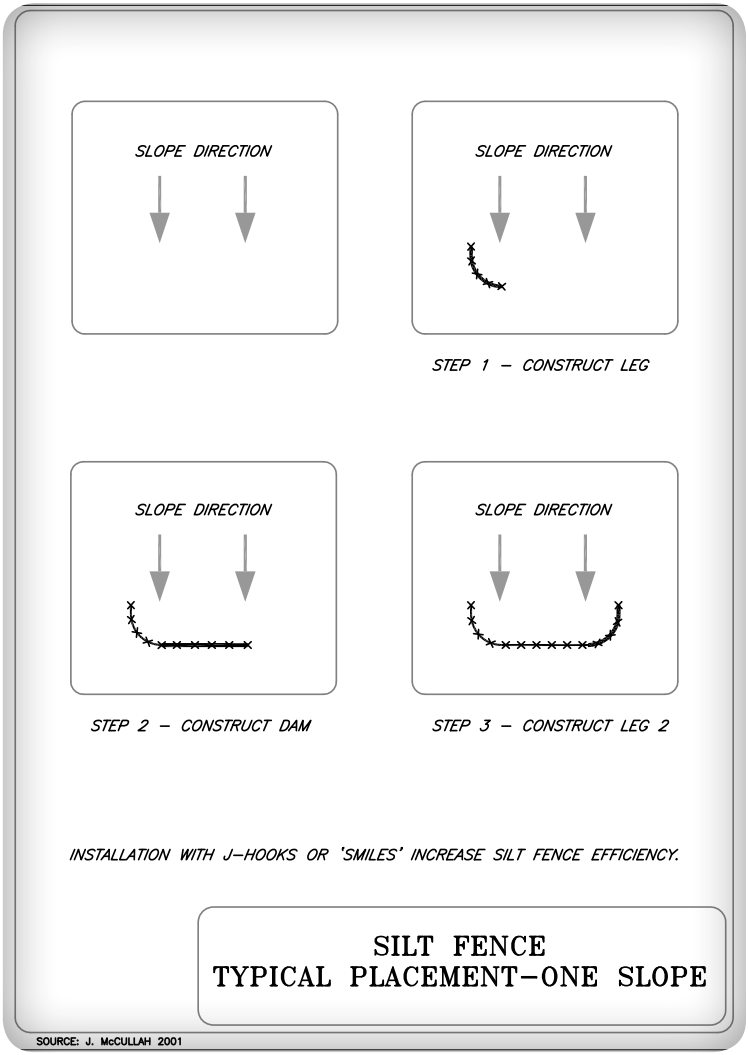
SLOPE DIRECTION
SLOPE DIRECTION
STEP 1 – CONSTRUCT LEG
SLOPE DIRECTION
SLOPE DIRECTION
STEP 2 – CONSTRUCT DAM
STEP 3 – CONSTRUCT LEG 2
INSTALLATION WITH J–HOOKS OR 'SMILES' INCREASE SILT FENCE EFFICIENCY.
SILT FENCE
TYPICAL PLACEMENT–ONE SLOPE
SOURCE: J. McCULLAH 2001

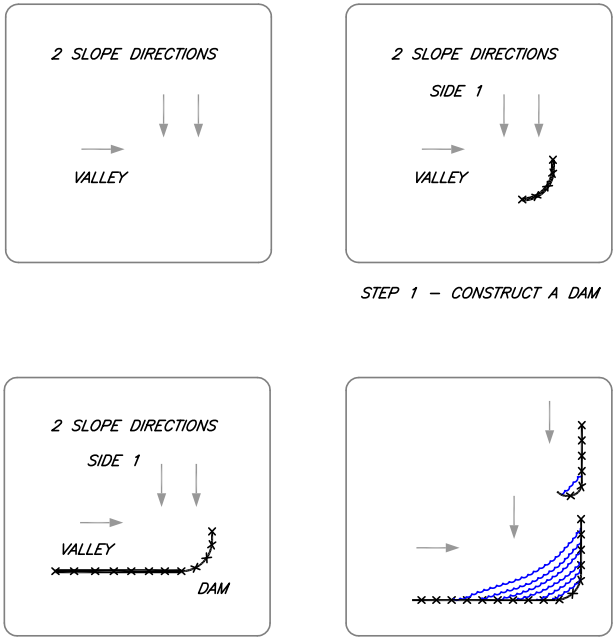


INSTALLATION WITH J–HOOKS WILL INCREASE SILT FENCE EFFICIENCY AND REDUCE EROSION–CAUSING FAILURES.

SILT FENCE
TYPICAL PLACEMENT–TWO SLOPES

SOURCE: J. McCULLAH 2001

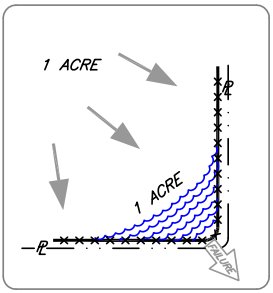


*Incorrect – Do Not layout "perimeter control" silt fences along property lines. All sediment laden runoff will concentrate and overwhelm the system.*

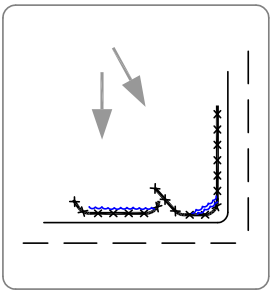

*Correct – Install J–hooks*

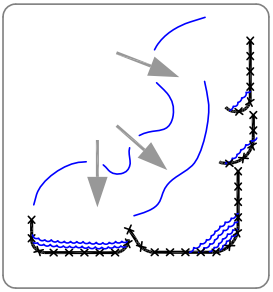

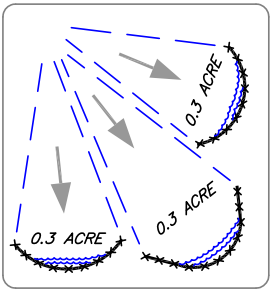


*Discreet segments of silt fence, installed with J–hooks or 'smiles' will be much more effective.*

SILT FENCE PLACEMENT FOR PERIMETER CONTROL

SOURCE: J. McCULLAH 2001

# STRAW OR HAY BALE BARRIER

## General Description

Straw and hay bale barriers are a type of temporary sediment barrier installed across or at the toe of a slope, to intercept and retain small amounts of sediment from disturbed or unprotected areas.

Straw or hay bale barriers have a useful life of less than six months. They function primarily to slow and pond the water and allow soil particles to settle. They are not designed to withstand high heads of water, and therefore should be located where only shallow pools can form. Their use is limited to areas that only contribute sheet flow to the device.

Straw or hay bale barriers constitute a sediment control practice, not an erosion control practice. The must be used in conjunction with other practices that do prevent or control erosion. Improperly applied or installed sediment barriers will increase erosion.

***Straw or hay bale barriers should generally not be used across streams, channels, swales, ditches or other drainage ways or areas with concentrated flows.*** Such barriers are not capable of effectively filtering the high rates and volumes of water associated with channelized flow. However, they may be used for check dams in applications where installation access or other conditions prevent the use of preferred materials such as stone; in such cases, installation must provide proper embedment of the straw or hay bale barrier, limit contributing drainage area to less than an acre, and provide for frequent monitoring of the barrier. Straw or hay bale barriers installed across a concentrated flow path are subject to undercutting, end cutting, and overtopping. This frequently not only results in the bypass of sediment laden-water, but also in the complete failure of the barrier. Such failures typically release the sediment accumulated on the upgradient side of the barrier, and severe erosion of the channel both upstream and downstream of the device.

## Considerations

- Straw or hay bale barriers principally trap sediment by temporarily ponding water, allowing particles to settle. These barriers are not designed to withstand high heads of water; therefore they should be located where only shallow pools can form. Straw or hay bale barriers are used where:
    - Flow to the barrier from a disturbed area occurs as overland sheet flow.
    - Sedimentation can pollute or degrade adjacent wetlands or watercourses.
    - Sedimentation will reduce the capacity of storm drainage systems or adversely affect adjacent areas.
    - The contributing drainage area is less than 1/4 acre per 100 feet of barrier length, the maximum length of slope above the barrier is 100 feet, and the maximum gradient behind the barrier is 50 percent (2:1). If any of these conditions are exceeded, other measures may be necessary to control erosion and to intercept and treat the sediment load.
    - Sediment barriers should not be used in areas of concentrated flows. However, they may be used for check dams in applications where installation access or other conditions prevent the use of preferred materials such as stone; in such cases, installation must provide proper embedment of the straw or hay bale barrier, limit contributing drainage area to less than one acre, and provide for frequent monitoring of the barrier. Under no circumstances should sediment barriers be constructed in live streams or in swales where there is the possibility of a washout.
- Straw or hay bales should only be used as a temporary barrier for no longer than 60 days.
- Potential causes of straw or hay bale barrier failure include:
    - Improper placement on the site;

- Allowing excessive drainage area to the barrier;
- Inadequate keying of the bales into the ground surface;
- Inadequate maintenance after installation;

## Maintenance Requirements

- Hay bale barriers should be inspected immediately after each rainfall and at least daily during prolonged rainfall.
- Barriers should be repaired immediately if there are any signs of erosion or sedimentation below them. If there are signs of undercutting at the center or the edges of the barrier, or impounding of large volumes of water behind the barrier, the barrier should be replaced with an alternative measure to intercept and capture sediment (for example, a diversion berm directing sediment-laden runoff to a sediment trap or basin).
- Damaged or decomposed bales should be replaced promptly.
- Sediment deposits should be removed after each storm event. They must be removed when deposits reach approximately one-half the height of the barrier.
- Any sediment deposits remaining in place after the filter barrier is no longer required should be dressed to conform to the existing grade, prepared and seeded.

## Specifications

- Sediment barriers should be installed prior to any soil disturbance of the contributing drainage area above them.
- Bales should be placed in a single row, lengthwise on the contour, with ends of adjacent bales tightly abutting one another. The ends of the barrier should be flared up slope.
- Barriers should not be constructed more than one bale high.
- All bales should be either wire-bound or string-tied. Bales should be installed so that bindings are oriented around the

sides, parallel to the ground surface to prevent deterioration of the bindings.

- The barrier should be entrenched and backfilled. A trench should be excavated the width of a bale and the length of the proposed barrier to a minimum depth of 4 inches.
- After the bales are staked and chinked, the excavated soil should be backfilled against the barrier. Backfill soil should conform to the ground level on the downhill side and should be built up 4 inches against the uphill side of the barrier. Ideally, bales should be placed 10 feet away from the toe of slope.
- At least two stakes driven through the bale and penetrating at least 18 inches into the ground, should securely anchor each bale. The first stake in each bale should be driven toward the previously laid bale to force the bales together. Stakes should be driven deep enough into the ground to securely anchor the bales.
- The gaps between bales should be chinked (filled by wedging) with hay to prevent water from escaping between the bales.
- Inspection should be frequent and repair or replacement should be made promptly as needed. Bale barriers should be removed when they have served their usefulness, but not before the upslope areas have been permanently stabilized.

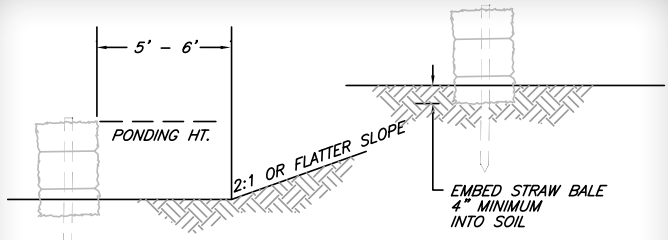


SECTION A – A

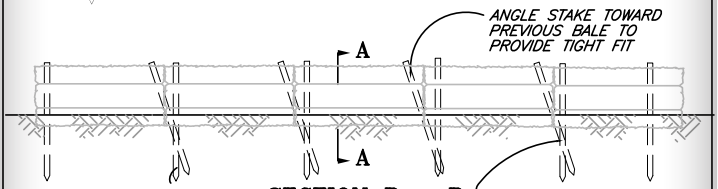


SECTION B – B

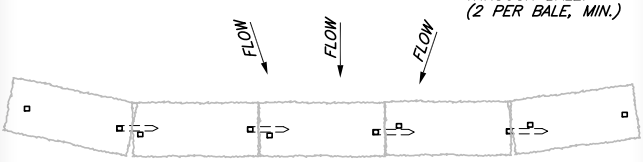


PLAN

NOTES:

1. THE BALES SHALL BE PLACED ON SLOPE CONTOUR.
2. BALES TO BE PLACED IN A ROW WITH THE ENDS TIGHTLY ABUTTING.
3. KEY IN BALES TO PREVENT EROSION OR FLOW UNDER BALES.
4. REFER TO DESCRIPTION OF "SILT FENCE" FOR DIAGRAMS ILLUSTRATING PLACEMENT OF BARRIERS FOR EFFECTIVE SEDIMENT CONTROL.

STRAW OR HAY BALE BARRIER

ADAPTED FROM J. McCULLAH 1994

# EROSION CONTROL MIX BERMS

## General Description

An erosion control mix berm is a trapezoidal berm that intercepts sheet flow and ponds runoff, allowing sediment to settle, and filtering sediment as well. They are an environmentally sensitive and cost-effective alternative to silt fence. An alternative to a simple erosion control mix berm is a "continuous contained berm", consisting of erosion control mix compost encapsulated in a mesh fabric (or "filter sock").

This barrier is installed across or at the toe of a slope, to intercept and retain small amounts of sediment from disturbed or unprotected areas.

Erosion control mix berms and socks sometimes offer a better solution than silt fence and other sediment control methods, because the organic material does not require any special trenching, construction, or removal, unlike straw bales, silt fence or coir rolls. This makes the technique very cost-effective.

The erosion control mix is organic, biodegradable, renewable, and can be left onsite. This is particularly important below embankments near streams, as re-entry to remove or maintain a synthetic barrier can cause additional disturbance. Silt fence has to be disposed of as a solid waste, and is often left abandoned on job sites.

Erosion control mix berms can be easily and quickly fixed, if they are disturbed in the course of construction activity.

## Considerations

The berm is used where:

- Sedimentation can pollute or degrade adjacent wetland and/or watercourses.
- Sedimentation will reduce the capacity of storm drainage systems or adversely affect adjacent areas.
- The contributing drainage area is less than 1/4 acre per 100 feet of barrier length, the maximum length of slope above the barrier is 100 feet, and the maximum gradient behind the barrier is 5 percent. If the slope length is greater, other measures such as diversions may be necessary to reduce the slope length.
- Sediment barriers should not be used in areas of concentrated flows. Under no circumstances should erosion control mix barriers be constructed in live streams or in swales where there is the possibility of a washout.
- Sediment barriers are effective only if installed and maintained properly.
- Sediment barriers should be installed prior to any soil disturbance of the contributing drainage area above them.
- Frozen ground, outcrops of bedrock and very rooted forested areas are locations where berms of erosion control mix are most practical and effective.
- Other BMPs should be used at low points of concentrated runoff, below culvert outlet aprons, around catch basins and closed storm systems, and at the bottom of steep perimeter slopes.

## Maintenance Requirements

- Filter berms should be inspected immediately after each rainfall and at least daily during prolonged rainfall. They should be repaired immediately if there are any signs of erosion or sedimentation below them. If there are signs of breaching of the barrier, or impounding of large volumes of water behind them, then they should be replaced with other measures to intercept and trap sediment (such as a diversion berm directing runoff to a sediment trap or basin).
- Sediment deposits should be removed after each storm event. They must be removed when deposits reach approximately one-third of the height of the barrier.
- Filter berms should be reshaped or reapplied as needed.
- Any sediment deposits remaining in place after the barrier is no longer required should be dressed to conform to the existing grade, prepared and seeded.

## Specifications

Erosion control mix can be manufactured on or off the project site. It must consist primarily of organic material, separated at the point of generation, and may include shredded bark, stump grindings, composted bark, or acceptable manufactured products. Wood and bark chips, ground construction debris or reprocessed wood products will not be acceptable as the organic component of the mix.

- Composition of the erosion control mix should be as follows:
    - Erosion control mix should contain a well-graded mixture of particle sizes and may contain rocks less than 4” in diameter. Erosion control mix must be free of refuse, physical contaminants, and material toxic to plant growth. The mix composition should meet the following standards:
    - The organic matter content should be between 25 and 65%, dry weight basis.

- Particle size by weight should be 100% passing a 3“ screen, 90% to 100% passing a 1-inch screen, 70% to 100% passing a 0.75-inch screen, and a maximum of 30% to 75%, passing a 0.25-inch screen.
- The organic portion needs to be fibrous and elongated.
- The mix should not contain silts, clays or fine sands.
- Soluble salts content should be < 4.0 mmhos/cm.
- The pH should be between 5.0 and 8.0.

- The barrier must be placed along a relatively level contour. It may be necessary to cut tall grasses or woody vegetation to avoid creating voids and bridges that would enable fines to wash under the barrier through the grass blades or plant stems.
- The barrier must be a minimum of 12” high, as measured on the uphill side of the barrier, and a minimum of two feet wide.

## Continuous Contained Berms

An alternative product, the continuous contained berm (or “filter sock”), can be an effective sediment barrier as it adds containment and stability to a berm of erosion control mix. The organic mix is placed in the synthetic tubular netting and performs as a sturdy sediment barrier that is highly durable. It especially works well in areas where trenching is not feasible such as over frozen ground or over pavement. See the detail drawing in this section for the installation of continuous contained berms. Seeds may be added to the organic filler material and can permanently stabilize a shallow slope. The containment will provide stability while vegetation is rooting through the netting.

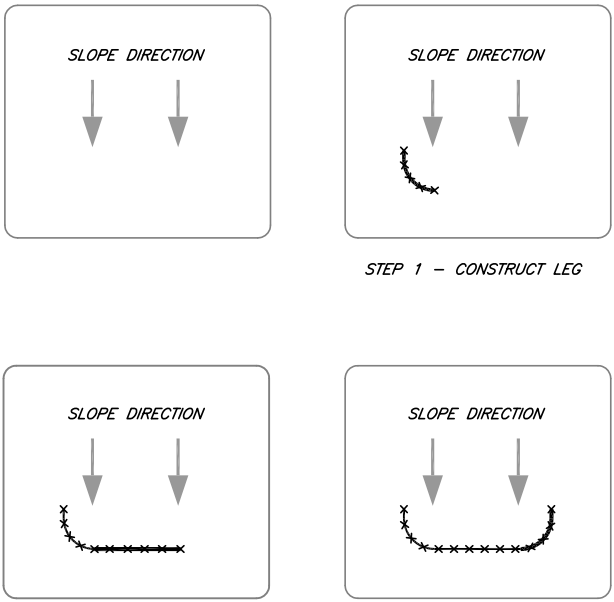


INSTALLATION WITH J–HOOKS OR 'SMILES'
INCREASES EROSION CONTROL MIX BERM EFFICIENCY.

EROSION CONTROL MIX BERM
TYPICAL PLACEMENT–ONE SLOPE

ADAPTED FROM J. McCULLAH 2002

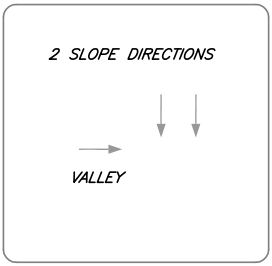


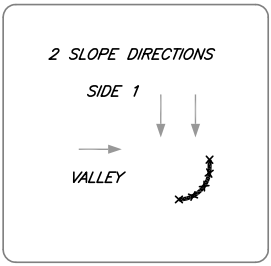


STEP 1 – CONSTRUCT A DAM

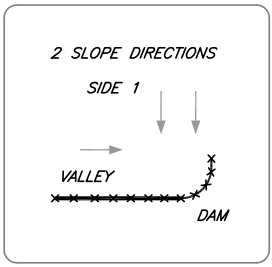


STEP 2 – CONSTRUCT SIDE 2

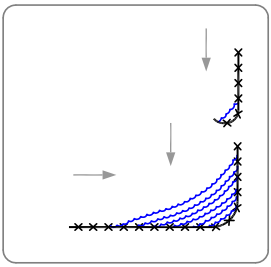

STEP 3 – CONSTRUCT J–HOOKS AS NEEDED

INSTALLATION WITH J–HOOKS WILL INCREASE EROSION CONTROL MIX BERM EFFICIENCY AND REDUCE EROSION–CAUSING FAILURES.

EROSION CONTROL MIX BERM
TYPICAL PLACEMENT–TWO SLOPES

ADAPTED FROM J. McCULLAH 2002

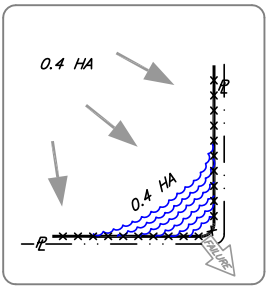


*Incorrect – Do Not layout "perimeter control" erosion control mix berms along property lines. All sediment laden runoff will concentrate and overwhelm the system.*

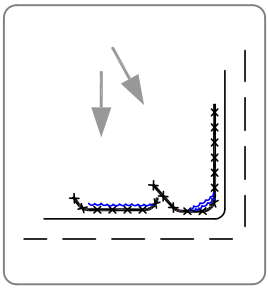

*<u>Correct</u> – Install J–hooks*

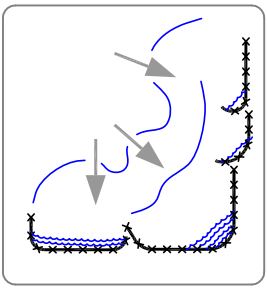

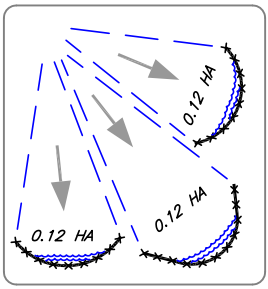


*Discreet segments of compost berms, installed with J–hooks or 'smiles' will be much more effective.*

EROSION CONTROL MIX
BERM PLACEMENT
FOR PERIMETER CONTROL

ADAPTED FROM J. McCULLAH 2002

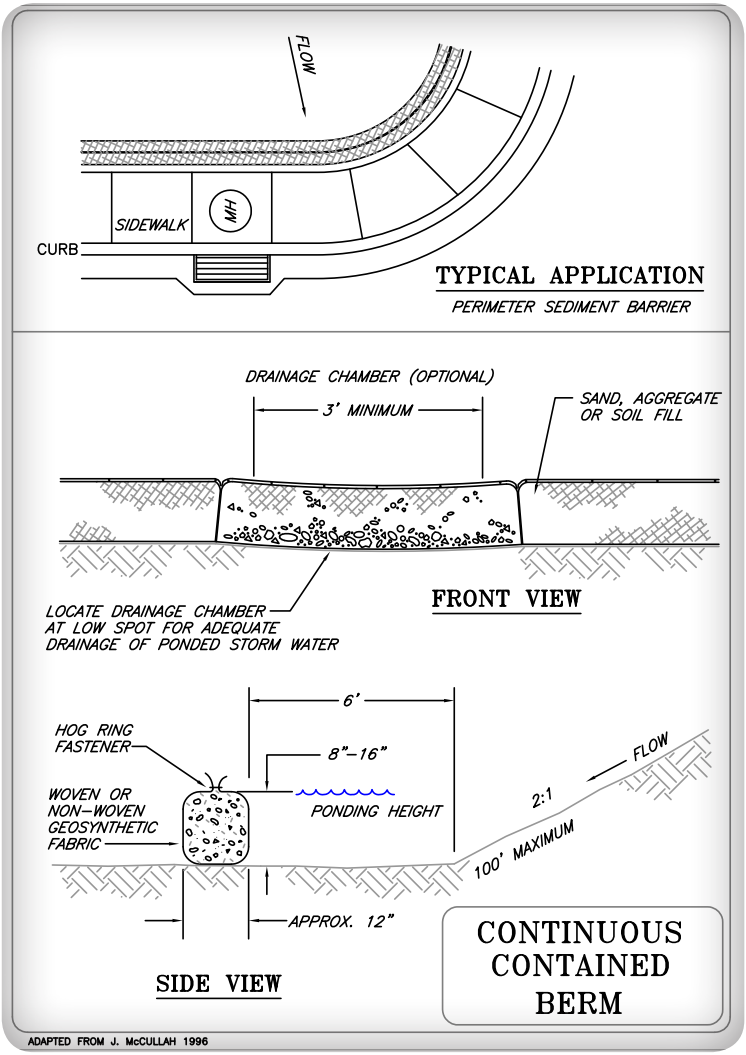
FLOW
SIDEWALK
HH
CURB
TYPICAL APPLICATION
PERIMETER SEDIMENT BARRIER
DRAINAGE CHAMBER (OPTIONAL)
3' MINIMUM
SAND, AGGREGATE OR SOIL FILL
FRONT VIEW
LOCATE DRAINAGE CHAMBER AT LOW SPOT FOR ADEQUATE DRAINAGE OF PONDED STORM WATER
6'
HOG RING FASTENER
8"–16"
WOVEN OR NON–WOVEN GEOSYNTHETIC FABRIC
PONDING HEIGHT
2:1
FLOW
100' MAXIMUM
APPROX. 12"
SIDE VIEW
CONTINUOUS CONTAINED BERM
ADAPTED FROM J. McCULLAH 1996

# TEMPORARY CHECK DAMS

## General Description

Temporary check dams are small temporary dams constructed across a swale or drainage ditch. Check dams are used to reduce the velocity of concentrated stormwater flows, thereby reducing erosion of the swale or ditch.

Check dams may also trap small amounts of sediment generated in the ditch itself. However, the check dam is not a sediment trapping practice and should not be used as such.

The practice is limited to use in small open channels that drain one acre or less. It should **not** be used in either perennially flowing streams or intermittent stream channels.

Check dams can be constructed of stone. In locations where stone is not available, timber check dams may be considered. Typical applications include temporary or permanent ditches or swales, which need protection during the establishment of grass linings.

Hay or straw bales should generally not be used as check dams, or in any location where there is concentrated flow. However, they may be used for check dams in applications where installation access or other conditions prevent the use of preferred materials such as stone; in such cases, installation must provide proper embedment of the straw or hay bale barrier, limit contributing drainage area to less than one acre, and provide for frequent monitoring of the barrier.

## Considerations

- This practice is intended for use in areas of concentrated flow, but must not be used in stream channels (whether perennial or intermittent).
- The check dam may be left in place permanently to avoid unnecessary disturbance of the soil on removal, but only if the project design has accounted for their hydraulic performance and construction plans call for them to be retained.
- If it is necessary to remove a stone check dam from a grass-lined channel that will be mowed, care should be taken to ensure that all stones are removed. This includes stone that has washed downstream.

## Maintenance Requirements

- Check dams should be inspected after each rainfall and at least daily during prolonged rainfall and necessary repairs should be made immediately.
- Inspections should verify that the center of the dam is lower than the edges.
- Erosion caused by high flows around the edges of the dam must be corrected immediately.
- If evidence of siltation in the water is apparent downstream from the check dam, the check dam should be inspected and adjusted immediately.
- Check dams should be checked for sediment accumulation after each significant rainfall. Sediment should be removed when it reaches one half of the original height or before.

## Specifications

Temporary check dams should conform to the following requirements:

- Check dams should be installed before runoff is directed to the swale or drainage ditch.
- The maximum contributing drainage area to the dam should be less than one acre.
- The maximum height of the dam should be 2 feet.
- The center of the dam should be at least 6 inches lower than the outer edges.
- The maximum spacing between the dams should be such that the toe of the upstream dam is at the same elevation as the overflow elevation of the downstream dam.
- The check dam should not be used in a flowing stream.
- Stone check dams should be constructed of a well-graded angular 2-inch to 3-inch stone. ¾-inch stone on the upgradient face is recommended for better filtering.
- If carefully installed and monitored, timber check dams may be used, and should be constructed of 4-inch to 6-inch logs embedded at least 18 inches deep into the soil. However, stone check dams are generally preferred. The stone has the ability to conform to the channel and settle if scour occurs, rendering stone check dams less susceptible to scour around the ends and downstream of the devices.
- If provided by design and construction plans, leave the dam in place permanently.
- Temporary structures should be removed once the swale or ditch has been stabilized:
    - In temporary ditches and swales, check dams should be removed and the ditch filled in when it is no longer needed.
    - In permanent structures, check dams should be removed when a permanent lining has been established. If the

permanent lining is vegetation, then the check dam should be retained until the grass has matured to protect the ditch or swale. The area beneath the check dam must be seeded and mulched immediately after removal.

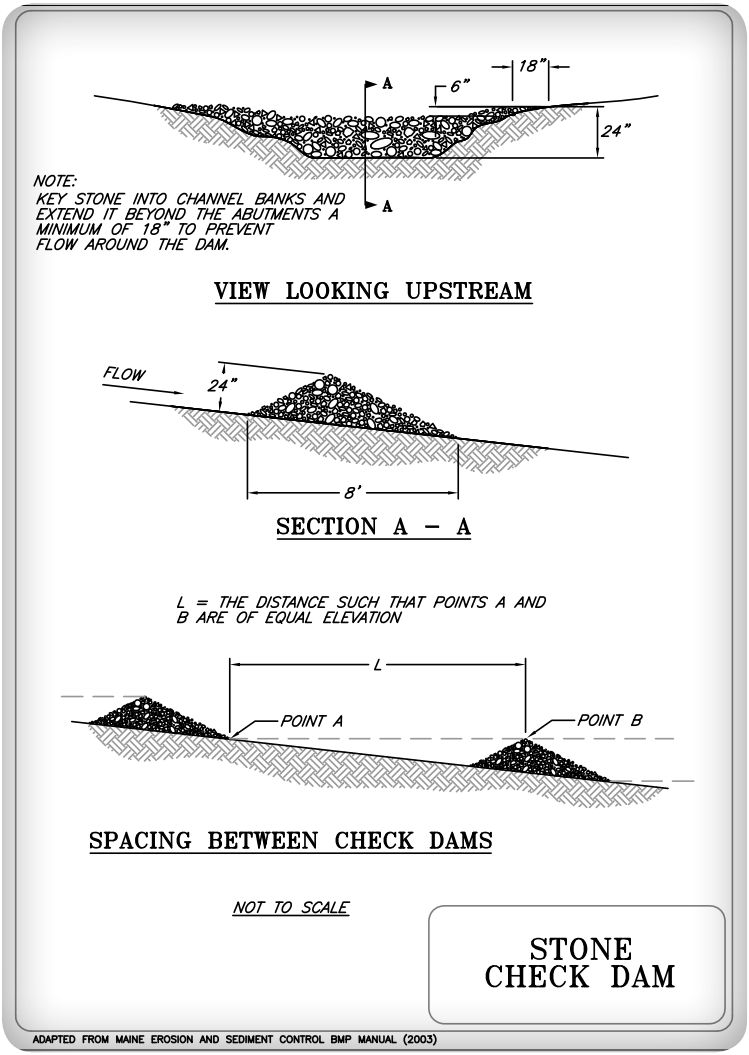

# TEMPORARY STORM DRAIN INLET PROTECTION

## General Description

A storm drain inlet protection is a sediment barrier installed around a storm Drain drop inlet or curb inlet to reduce sediment discharge. The sediment barrier may be constructed of gravel and wire mesh, or concrete blocks and gravel. Sediment removal is accomplished by shallow ponding adjacent to the barrier and resulting settling of the sediment particles. Temporary storm drain inlet protection using stone and wire will not prevent fine sediment from entering a storm drain. This technique is intended as a secondary sediment area as it will only trap the coarser particles. If turbid water is being directed to this structure and that water does not continue to a sediment trap or basin, alternative solutions for treating the water should be evaluated upslope of the catch basin.

The purpose of storm drain inlet protection is to prevent sediment from entering a storm drainage system prior to permanent stabilization of the contributing disturbed area. Storm drains made operational before their drainage areas are stabilized can convey large amounts of sediment to storm sewer systems or natural drainage ways. In some cases, the storm drain itself may accumulate sufficient sediment to significantly reduce or eliminate its conveyance capacity. To avoid these problems, it is necessary to prevent sediment from entering the system at the inlets.

## Considerations

- This practice applies primarily to enclosed drainage systems.
- This practice includes several types of inlet barriers, the use of which may depend on site conditions and the type of inlet. Other techniques for accomplishing the same purpose may be used, but they should be installed only after careful study of their effectiveness.
- This practice is effective in reducing coarse grain suspended particles from runoff. Silt and clay particles will bypass the inlet protection.
- The inlet protection practices are for drainage areas of **less than one acre**. Runoff from large disturbed areas should be routed through a sediment trap or sediment basin.
- The best way to prevent sediment from entering the storm sewer system is to stabilize the site as quickly as possible, preventing erosion and stopping sediment at its source.

## Maintenance Requirements

- Inlet barriers should be inspected before and after each rain event and repaired as needed.
- Sediment should be removed and the storm drain sediment barrier restored to its original dimensions when the sediment has accumulated to 1/2 the design depth of the barrier. Removed sediment should be deposited in a suitable area and in such a manner that it will not erode.
- The barriers should be removed and the area stabilized when the contributing drainage area has been properly stabilized.
- All catch basins and storm drain inlets must be cleaned at the end of construction and after the site has been fully stabilized.

## Specifications

- The maximum contributing drainage area to the trap should be less than one acre;
- The inlet protection device should be constructed in a manner that will facilitate Clean-out and disposal of trapped sediments and minimize interference with construction activities.
- Any resultant ponding of stormwater must not cause excessive inconvenience or damage to adjacent areas or structures.
- Gravel and wire mesh inlet barriers should meet the following additional requirements:
    - This type of barrier has no overflow provision; therefore, ponding at the inlet may be significantly greater in depth than with other barriers, especially if sediment is not removed regularly. This type of barrier should not be used where overflow may endanger an exposed fill slope. Consideration should also be given to the possible effects of ponding on traffic movement, nearby structures, working areas, and adjacent property.
    - The wire mesh should be placed over the drop inlet so that the entire opening and a minimum of 12 inches around the opening are covered by the mesh;
    - The wire mesh should be hardware cloth or wire with openings up to one half inch;
    - The gravel filter should be clean coarse aggregate;
    - The gravel should be at least 18 inches on all sides of the drain opening; and
    - The gravel should be at least 12 inches in depth.
    - If the stone filter becomes clogged with sediment so that it no longer adequately performs its function, the stones must be pulled away from the inlet, cleaned and replaced.
- Concrete block and gravel inlet barriers should meet the following additional requirements:

- The blocks should be placed lengthwise in a single row around the perimeter of the inlet;
- The block ends should abut one another;
- The height of the barrier can be varied, depending on design needs, by stacking combinations of 4-inch, 8-inch and 12-inch wide blocks. The barrier of blocks and gravel filter should be a minimum of 12 inches high and no more than 24 inches high.
- A hardware cloth or wire mesh should be placed over the openings of the concrete blocks and extend at least 12 inches around the opening to prevent aggregate from being transported through the openings in the blocks. Hardware cloth or comparable wire mesh with 1/2-inch openings should be used.
- The gravel filter should be clean coarse aggregate;
- The gravel should be placed against the wire and along the outside edges of the blocks to the top of the block barrier.
- If the stone filter becomes clogged with sediment so that it no longer adequately performs its function, the stone must be pulled away from the blocks, cleaned and replaced.

## Manufactured Sediment Barriers

Manufactured sediment barriers are now available that could be functionally equivalent to the barriers listed above. These measures are acceptable as long as they are installed, used, and maintained as specified by the vendor or manufacturer, and prevent sediment from entering the storm drain system. If such products fail to perform the required sediment trapping function, they should be removed and replaced with an effective alternative barrier.

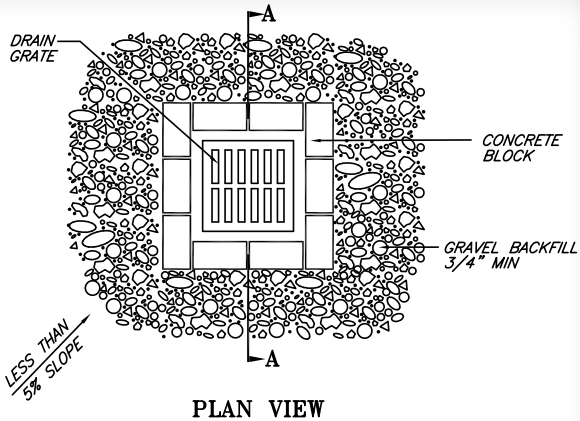


PLAN VIEW

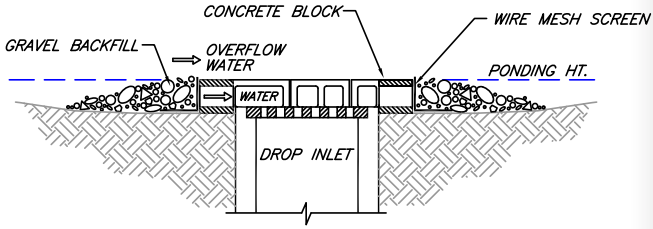


SECTION A – A

NOTES:

1. DROP INLET SEDIMENT BARRIERS ARE TO BE USED FOR SMALL, NEARLY LEVEL DRAINAGE AREAS. (LESS THAN 5%)
2. EXCAVATE A BASIN OF SUFFICIENT SIZE ADJACENT TO THE DROP INLET.
3. THE TOP OF THE STRUCTURE (PONDING HEIGHT) MUST BE WELL BELOW THE GROUND ELEVATION DOWNSLOPE TO PREVENT RUNOFF FROM BYPASSING THE INLET. A TEMPORARY DIKE MAY BE NECESSARY ON THE DOWNSLOPE SIDE OF THE STRUCTURE.

CONCRETE BLOCK AND GRAVEL DROP INLET SEDIMENT BARRIER

ADAPTED FROM J. McCULLAH 1994

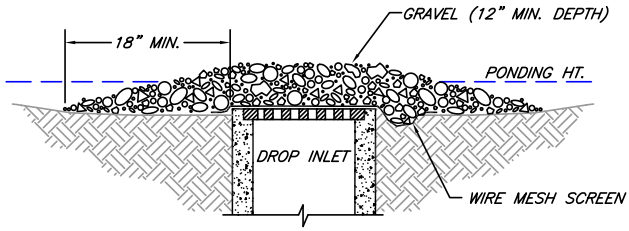


PROFILE

GRAVEL & WIRE MESH
DROP INLET
SEDIMENT BARRIER

ADAPTED FROM: MINNICK & MARSHALL, 1992

# TEMPORARY CONSTRUCTION EXIT

## General Description

A stabilized construction exit consists of a pad of stone aggregate placed on a geotextile filter fabric, located at any point where traffic will be leaving a construction site to an existing access road way or other paved surface. Its purpose is to reduce or eliminate the tracking of sediment onto public roads by construction vehicles. This helps protect receiving waters from sediment carried by stormwater runoff from public roads.

## Considerations

- Only construction traffic ***leaving*** the site is required to use the temporary stabilized exit. Consider providing a separate, unprotected, entrance for traffic entering the site. This will increase the longevity of the stabilized exit by eliminating heavy loads entering the site and reducing the total traffic over the device.
- Locate construction entrances and exits to limit sediment leaving the site and to provide for maximum utility by all construction vehicles. Avoid entrances that have steep grades and entrances at curves in public roads.
- The entrance should be maintained in a condition that will prevent tracking or flowing of sediment onto public rights-of-way. This may require periodic top dressing with additional stone as conditions demand, and repair and/or maintenance of any measures used to trap sediment.

## Maintenance Requirements

The exit should be maintained in a condition that will prevent tracking of sediment onto public rights-of-way.

- When the control pad becomes ineffective, the stone should be removed along with the collected soil material, regraded on site, and stabilized. The entrance should then be reconstructed.
- The contractor should sweep the pavement at exits whenever soil materials are tracked onto the adjacent pavement or traveled way.
- When wheel washing is required, it should be conducted on an area stabilized with aggregate, which drains into an approved sediment-trapping device. All sediment should be prevented from entering storm drains, ditches, or waterways.

## Specifications

Temporary construction exits should meet the following requirements:

- The minimum stone used should be 3-inch crushed stone.
- The minimum length of the pad should be 75 feet, except that the minimum length may be reduced to 50 feet if a 3-inch to 6-inch high berm is installed at the entrance of the project site.
- The pad should extend the full width of the construction access road or 10 feet, whichever is greater.
- The pad should slope away from the existing roadway.
- The pad should be at least 6 inches thick.
- A geotextile filter fabric should be placed between the stone pad and the earth surface below the pad.

- The pad should be maintained or replaced when mud and soil particles clog the voids in the stone such that mud and soil particles are tracked off-site.
- Natural drainage that crosses the location of the stone pad should be intercepted and piped beneath the pad, as necessary, with suitable outlet protection.

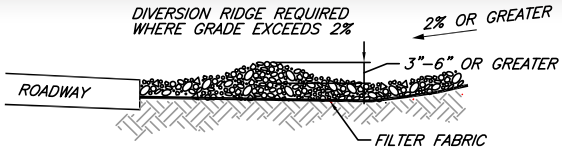


SECTION A – A

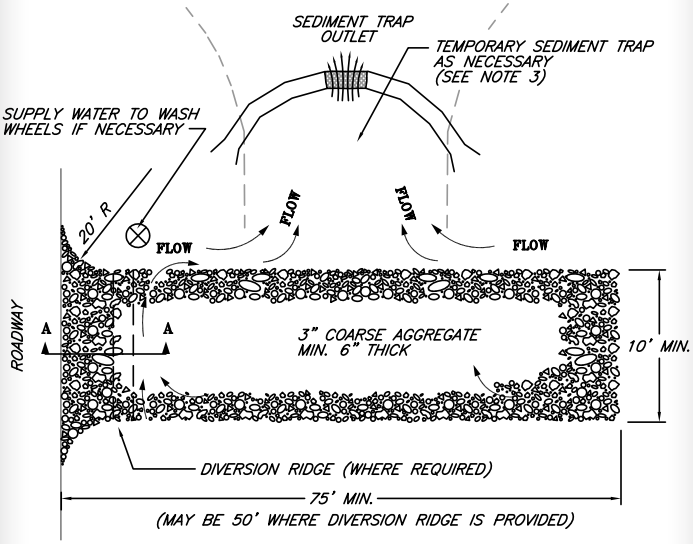


PLAN

NOTES:

1. THE ENTRANCE SHALL BE MAINTAINED IN A CONDITION THAT WILL PREVENT TRACKING OR FLOWING OF SEDIMENT ONTO PUBLIC RIGHT–OF–WAYS. THIS MAY REQUIRE TOP DRESSING, REPAIR AND/OR CLEAN OUT OF ANY MEASURES USED TO TRAP SEDIMENT.

2. WHEN NECESSARY, WHEELS SHALL BE CLEANED PRIOR TO ENTRANCE ONTO PUBLIC RIGHT–OF–WAY.

3. WHEN WASHING IS REQUIRED, IT SHALL BE DONE ON AN AREA STABILIZED WITH CRUSHED STONE THAT DRAINS INTO AN APPROVED SEDIMENT TRAP OR SEDIMENT BASIN.

**TEMPORARY GRAVEL CONSTRUCTION EXIT**

ADAPTED FROM J. McCULLAH 1994

# TEMPORARY SEDIMENT TRAP

## General Description

A sediment trap is a small, temporary ponding area to intercept sediment-laden runoff from small disturbed areas. Intercepted runoff is retained long enough to allow for settling of the coarser sediment particles. A sediment trap is usually installed in a drainage swale or channel, at a storm drain or culvert inlet, or other points of discharge from a disturbed area.

## Considerations

- A sediment trap should be installed as close as possible to the disturbed area or sediment source.
- Sediment traps should be used in drainage ways with small watersheds (contributing drainage area less than 5 acres). For larger contributing areas, engineered sediment basins should be used instead.
- Sediment traps should be installed where runoff from undisturbed areas can be excluded from the trap.
- Traps should be located to obtain maximum storage benefit from the terrain, as well as for ease of removal and disposal of accumulated sediment.

## Maintenance Requirements

- Sediment traps should be inspected at least weekly during construction and after every storm (or daily during prolonged rainfall periods), to insure that they are functioning properly and are not damaged. Repairs should be made immediately.
- Sediment should be removed and the trap restored to original capacity when sediment has accumulated to 50% of the original volume.
- The materials removed from the trap should be properly disposed of and stabilized.
- Sediment trap outlets should be examined at the time of inspection for any damage, and repaired immediately if any such damage is observed.
- Geotextile fabric or stone used around a pipe-outlet riser should be checked periodically and replaced when the material has become clogged with sediment.

## Specifications

Temporary sediment traps should meet the following requirements:

- Sediment traps should be located so that they can be installed prior to disturbing the area they are to protect.
- The trap should be installed as close to the disturbed area or source of sediment as possible.
- The maximum contributing drainage area to the trap should be less than 5 acres.
- The minimum volume of the trap should be 3,600 cubic feet of storage for each acre of drainage area.
- The side slopes of the trap should be 3:1 or flatter, and should be stabilized immediately after their construction.

*Embankments:*

- The maximum height of the sediment trap embankment should be 4 feet when measured from the lowest point of natural ground on the downstream side of the embankment.
- The minimum top width of the embankment should be 6 feet.

*Outlets (General Requirements):*

- The outlet should be designed, constructed and maintained in such a manner that sediment does not leave the trap and that erosion at or below the outlet does not occur.
- Outlets should be designed so that the top of the embankment is a minimum of 1 foot above the crest elevation of the outlet. The outlet of the trap should be a minimum of one foot below the crest of the trap
- The outlet should discharge to a stabilized area. The outlets must empty onto undisturbed ground, into a watercourse, stabilized channel or a storm sewer system.
- Outlets may be constructed as earth spillways, stone outlets, or pipe outlets.

*Earth Outlets:*

- An earth outlet sediment trap has a discharge point that is either over natural ground or cut into natural ground.
- The outlet width should be equal to 6 times the drainage area in acres.
- The embankment and outlet should be vegetated within 3 days of construction.

*Stone Outlets:*

- A stone outlet sediment trap has an outlet consisting of a crushed stone section in the embankment.

- The stone section should be located at the low point of the natural ground, as determined at the downstream side of the embankment.
- The outlet should be constructed of minimum size 1 ½" crushed stone.

*Pipe Outlet:*

- A pipe outlet sediment trap has a pipe through the embankment, with an inlet consisting of a perforated riser.
- The pipe and riser should be constructed of corrugated metal. Plastic pipe (polyvinyl chloride or high-density polyethylene) may be considered, if the piping is located where it will not be subject to damage from vehicle traffic or from ice and frost conditions.
- The top 2/3 of the riser should be perforated with 1-inch diameter holes spaced 8 inches vertically and 10 to 12 inches horizontally around the pipe.
- Anchoring Weight: The riser should have a base with sufficient weight to prevent flotation of the riser. Two approved bases are: (1) A concrete base 12 inches thick with the riser embedded 9 inches into the concrete base, or (2) 1/4" minimum thickness steel plate attached to the riser by a continuous weld around the circumference of the riser to form a watertight connection. The plate should have 2.5 feet of stone, gravel, or earth placed on it to prevent flotation. In either case, each side of the square base measurement should be the riser diameter plus 24 inches.
- In order to increase the efficiency of the trap, the riser can be wrapped with a geotextile fabric held in place by woven wire and secured by strapping. The cloth should cover an area at least six (6) inches above the highest hole and six (6) inches below the lowest hole. The top of the riser pipe should not be covered with filter cloth.
- Crushed stone can also be used around the riser to increase trap efficiency.

- The minimum pipe sizes should be determined as provided in the following table:

| Maximum Drainage Area (acres) | Minimum Barrel Diameter (inches) | Minimum Riser Diameter (inches) |
|---|---|---|
| 1 | 15 | 21 |
| 2 | 18 | 24 |
| 3 | 21 | 30 |
| 4 | 24 | 30 |
| 5 | 30 | 36 |

*Combination of Earth, Stone, or Pipe Outlets:*

- A temporary sediment trap may have a combination of outlets. For instance, a 16.5-foot earth spillway outlet (adequate for 3 acres) and a pipe outlet with an 18" CMP barrel with a 24" CMP riser (adequate for 2 acres) could be used for the maximum drainage area of 5 acres.

*Vegetation:*

- All embankments, earth spillways, and disturbed areas below the structure should be vegetated within 72 hours of completion of the construction of the structure.
- If the structure is not planned for more than one vegetative growing season, the structure may be vegetated using the recommendation of the Temporary Vegetation Best Management Practice described in this manual.
- Basins that will be carried over the winter and into the next vegetative growing season should be vegetated using the recommendations for Permanent Vegetation Best Management Practice

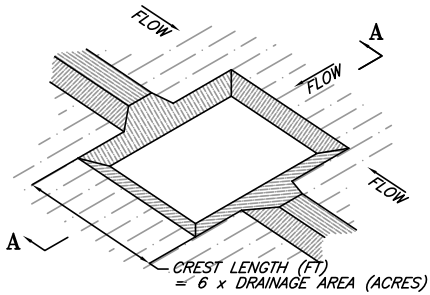


ISOMETRIC VIEW

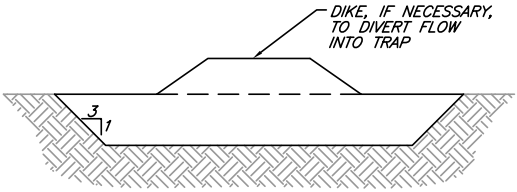


SECTION A–A

EXCAVATED

EARTH OUTLET
SEDIMENT TRAP

ADAPTED FROM ROCKINGHAM COUNTY CONSERVATION DISTRICT

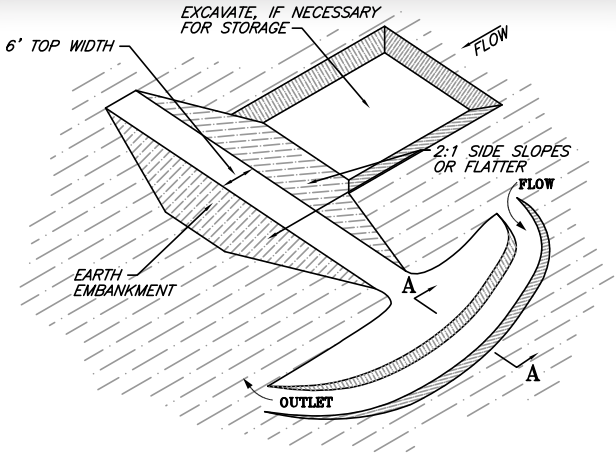


ISOMETRIC VIEW

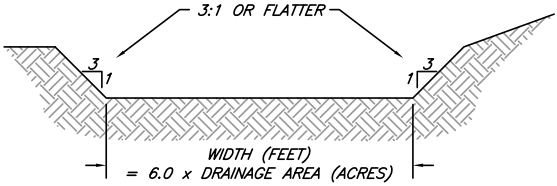


SECTION A–A

EMBANKMENT

EARTH OUTLET
SEDIMENT
TRAP

ADAPTED FROM ROCKINGHAM COUNTY CONSERVATION DISTRICT

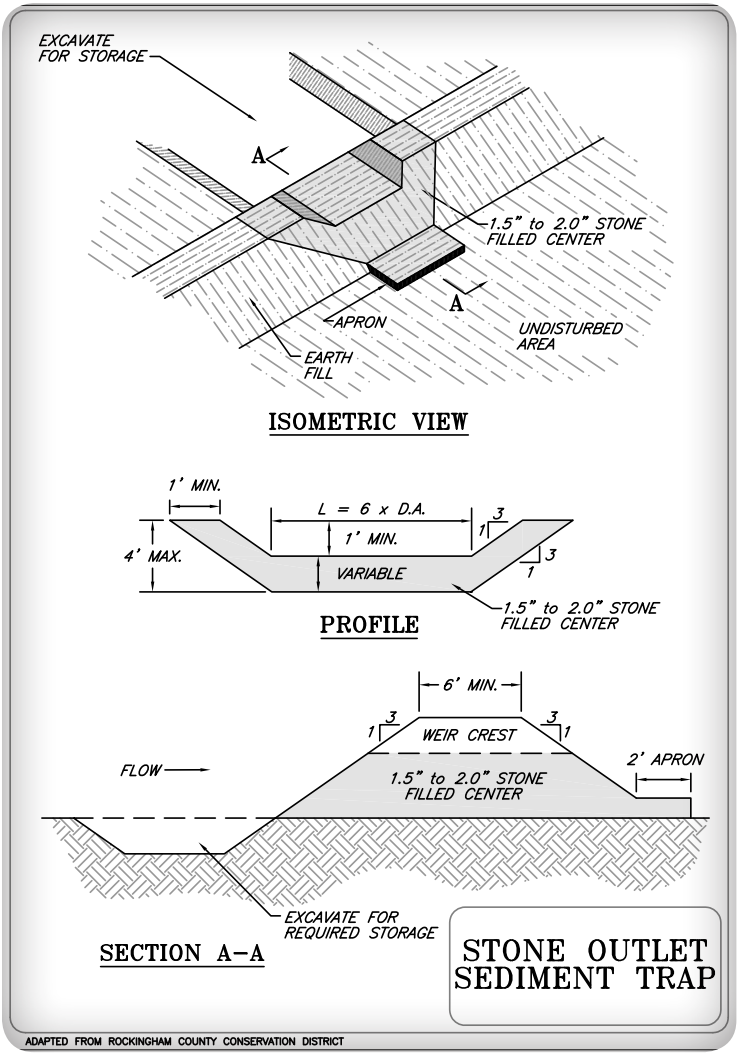
EXCAVATE FOR STORAGE
A
1.5" to 2.0" STONE FILLED CENTER
A
APRON
UNDISTURBED AREA
EARTH FILL
ISOMETRIC VIEW
1' MIN.
L = 6 x D.A.
3
1
1' MIN.
4' MAX.
VARIABLE
3
1
1.5" to 2.0" STONE FILLED CENTER
PROFILE
6' MIN.
3
1
3
1
WEIR CREST
2' APRON
FLOW
1.5" to 2.0" STONE FILLED CENTER
EXCAVATE FOR REQUIRED STORAGE
SECTION A–A
STONE OUTLET SEDIMENT TRAP
ADAPTED FROM ROCKINGHAM COUNTY CONSERVATION DISTRICT

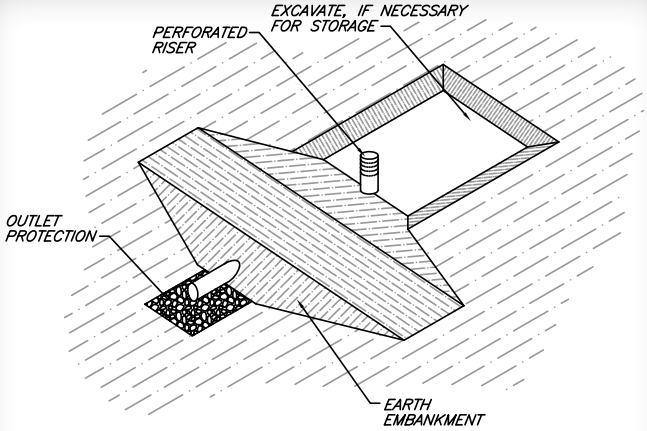


ISOMETRIC VIEW

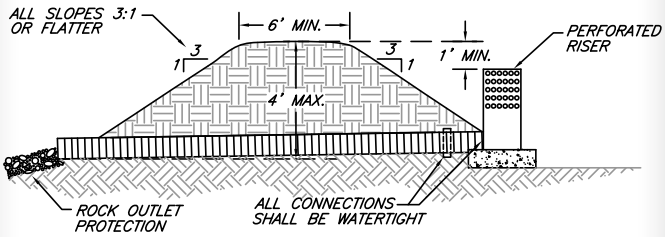


EMBANKMENT SECTION THROUGH BARREL & RISER

PIPE OUTLET SEDIMENT TRAP

ADAPTED FROM ROCKINGHAM COUNTY CONSERVATION DISTRICT

# TEMPORARY SEDIMENT BASIN

## General Description

A sediment basin is a water impoundment constructed to capture and store sediment and/or debris. Sediment is removed by temporarily storing sediment-laden runoff, allowing time for the sediment particles to settle. In some instances, settling may be enhanced by the introduction of flocculants (see separate description of the Flocculants Best Management Practice). Flocculants should only be used upon approval by NHDES.

Sediment basins may be made by constructing a dam or embankment or by excavating a depression.

Sediment basins differ from sediment traps, in that basins are engineered impoundment structures, and may serve larger areas than sediment traps.

The sediment basin's is designed to:

- Detain stormwater volume and slowly release it to the downstream waterways;
- Trap sediment originating from construction site and prevent subsequent deposition in downstream drainage waterways;
- Provide storage of the trapped sediment and debris.

## Considerations

- Sediment basins should only be used where the following conditions exist:
    - Failure of the dam will not result in loss of life; damage to homes, commercial or industrial buildings, main highways, or railroads; or interruption of the use or service of public utilities.

- The basin is designed by a Professional Engineer licensed in New Hampshire.
- The basin is designed in accordance with the practices applicable to impoundment embankments, as identified in Volume 2 of the New Hampshire Stormwater Manual.

- It is possible to use a basin that is designed for eventual permanent use as a detention basin or water quality treatment facility for the final constructed project. However, this practice should not be undertaken unless specifically provided in the design of the project, and authorized by the design engineer. In some cases, the long-term operating integrity of a basin can be adversely affected by temporary use as a sediment basin (such as potential clogging of soils intended to provide future infiltration function).
- A sediment basin should be installed as close as possible to the disturbed area or sediment source.
- Sediment basins should be installed where runoff from undisturbed areas can be excluded from the structure.
- Sediment basins mostly trap coarse-grained sediments. Fine-grained sediments such as silts and clays will remain suspended in the water and will travel off-site unless the water is detained for an extended period of time, or unless other treatment measures (such as use of flocculants) are implemented to enhance settling of these materials.
- Sediment basins, like detention ponds, can result in warmer water temperatures than the natural condition. Care must be exercised to not locate discharges from sediment basins near to cold-water streams.
- Pond locations and construction activities may affect downstream water quality, wetlands and water-related wildlife habitats. These conditions must be considered in the design.
- Overall planning and design should be carefully considered to minimize the number of sediment basins required.

## Maintenance Requirements

Sediment basin installations need to be regularly inspected during their installation. If there is any evidence of siltation downstream of the basin, corrective measures need to be implemented to keep sediment from entering downstream areas.

- Sediment basins should be inspected at least weekly during construction and after every storm (or daily during prolonged rainfall periods), to insure that they are functioning properly and are not damaged. Repairs should be made immediately.
- Outlet structures and emergency spillways should be examined at the time of inspection for any damage, and repaired immediately if any such damage is observed.
- Embankments should be examined at the time of inspection to ensure that they are structurally sound, are not showing signs of seepage, and are not damaged by erosion or by construction activities.
- The water discharged from sediment basins should be monitored during storm events to determine how well they are functioning and if sedimentation is apparent, additional erosion control measures should be applied to eliminate the source of sedimentation.
- Geotextile fabric or stone used around a pipe-outlet riser should be checked periodically and replaced when the material has become clogged with sediment.
- Sediment should be removed and the trap restored to original capacity when sediment has accumulated to the original design sediment storage volume. Note that the design sediment storage volume is typically only a small portion of the total volume of the basin.
- The materials removed from the basin should be properly disposed of and stabilized.

## Specifications

Sediment basins must meet the following requirements:

- Basins must be constructed and stabilized prior to disturbing the watershed above them. If sediment ponds will be stabilized with vegetation, they must be installed early in the growing season.
- Erosion and sediment control measures should be employed during the construction of the sediment basin to protect downstream waterbodies from sedimentation due to the construction disturbance required to install this BMP.
- The capacity of the sediment basin should be equal to the stormwater volume to be detained plus the volume of sediment expected to be trapped. Periodic removal of sediment will be necessary to maintain the pond's capacity.
- An outlet structure should be provided adequate to handle the 10-year frequency discharge without failure or significant erosion.
    - The outlet should be designed, constructed and maintained in such a manner that sediment does not leave the trap and that erosion at or below the outlet does not occur.
    - Outlets should be designed so that the top of the embankment provides the minimum freeboard specified in Volume 2 of the Stormwater Manual.
    - The outlet should discharge to a stabilized area. The outlets must empty onto undisturbed ground, into a watercourse, stabilized channel or a storm sewer system. Outlet protection should be provided.
- The minimum sediment storage volume of the basin should be 3,600 cubic feet of storage for each acre of drainage area. The capacity of the sediment basin should be equal to the stormwater volume to be detained plus the volume of sediment expected to be trapped.
- The side slopes of the basin should be 3:1 or flatter, and should be stabilized immediately after their construction.

- Embankments should be designed to meet applicable regulations, and should meet the design requirements identified in Volume 2 of the NH Stormwater Manual for embankment construction.
- The drainage area above the pond must be protected against erosion so that expected sedimentation will not shorten the planned effective life of the structure.
- Basins must be designed to be drained within a 3-day period.
- An emergency spillway should be provided to safely pass the 50-year design storm without damage to the embankment, assuming that the basin is full to design depth at the beginning of the storm. The emergency spillway should not be installed in fill.
- All areas disturbed during construction should be stabilized within seven calendar days of that disturbance in accordance with the Permanent Vegetation BMP, Temporary Mulching BMP, or other appropriate structural BMP. All construction of sediment basins must be completed and seeded by September 15th if vegetative measures will be used for final stabilization. Otherwise, side slopes must be stabilized with an alternative approved long-term stabilization measure. If structural measures such as riprap will be used for final stabilization, this time limit will not apply. Water should not be directed to the sediment basin until the basin is stabilized with vegetative or structural measures.
- A sediment basin with a pipe outlet structure should be fitted with a perforated riser surrounded by a gravel cone. This will serve to filter fine particulate material. A geotextile filter should be installed around the riser prior to the placement of the gravel.

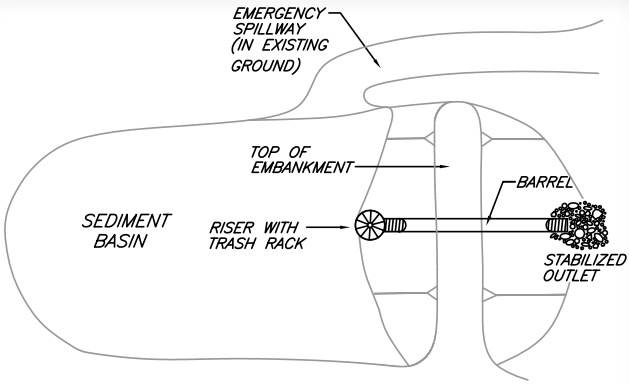


**PLAN**

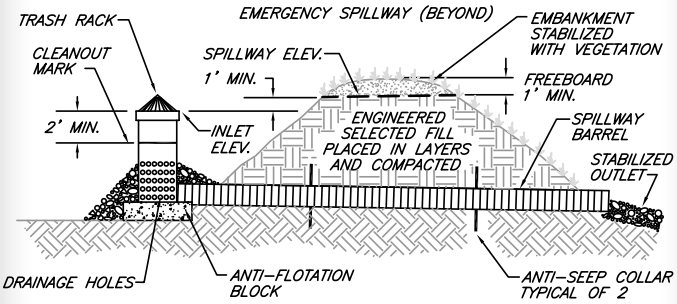


**SECTION**

NOTES:

1. THE TEMPORARY SEDIMENT BASIN, DESIGNED BY A QUALIFIED PROFESSIONAL, IS REQUIRED FOR DISTURBED AREAS GREATER THAN 5 ACRES WITHIN A DRAINAGE AREA LESS THAN 100 ACRES.
2. THE SEDIMENT BASIN WILL BE REMOVED WITHIN 3 YEARS.

**TYPICAL SEDIMENT BASIN**

ADAPTED FROM J. McCULLAH 1994

# CONSTRUCTION DEWATERING

## General Description

This construction dewatering practice is intended to prevent sedimentation associated with the management of water removed during construction from excavations, cofferdams, and other work areas that trap stormwater and groundwater.

Construction sites in New Hampshire typically require construction dewatering operations. Excavations that do not "daylight" to existing grade trap either rainwater or groundwater, and cofferdams collect rain, ground or seepage water within the work area. This water needs to be removed before certain operations can be performed or to keep work conditions safe. Contractors typically use ditch pumps to dewater these enclosed areas. If care is not taken to select the point of discharge and provide adequate treatment, the pumped water may discharge to downgradient natural resources such as lakes, wetlands, or streams, with subsequent sedimentation of those waterbodies.

Construction dewatering activities must be conducted to:

- Prevent the discharged water from eroding soil on the site.
- Remove sediment from the collected water.
- Preserve downgradient natural resources and property.
- Choose the best location for discharge in order to meet the above objectives.

## Considerations

- The discharge areas should be chosen with careful consideration to the downgradient water resources and the existing landscape's ability to treat water flows from the dewatering process. Wooded buffers and flat to moderate slopes provide the best opportunity for filtration and absorption of such discharges.
- Care must be exercised to prevent contact of water from construction dewatering with oil, grease, other petroleum products, or toxic and hazardous materials. Contaminated runoff must be contained, treated, and discharged or removed in accordance with NHDES requirements.
- All requirements of state law and permit requirements of local, state, and federal agencies must be met, including the Construction Dewatering General permit for projects that propose to discharge construction dewatering water to wetlands, intermittent streams, or other surface waters.
- The discharge should be stopped immediately if the receiving area shows any sign of instability or erosion.

## Maintenance Requirements

- During the active dewatering process, inspection of the dewatering facility should be reviewed at least daily, with more frequent or continuous supervision as warranted by site conditions.
- Special attention should be paid to the buffer area for any sign of erosion or concentration of flow that may damage the buffer's vegetation or underlying soil.
- The visual quality of the effluent should be monitored to assess whether additional treatment can be provide to prevent sedimentation of downstream receiving waters.

## Specifications

Dewatering excavated areas is conducted in two distinct operations: the removal of the collected water within the excavation and the treatment of the collected water.

*Water Removal:*

- Install diversion ditches or berms to minimize the amount of clean stormwater runoff allowed into the excavated area.
- For trench excavation, limit the trench length to 500 feet and place the excavated material on the upgradient side of the trench.
- The removal of water from the excavated area can be accomplished by numerous methods, including but not limited to gravity drainage through channels, mechanical pumping, siphoning, and using the bucket of construction equipment to scoop and dump water from the excavation. Water may also be withdrawn from the ground adjacent to an excavation by pumping of well points.
- All channels, swales, and ditches dug for discharging water from the excavated area should be stable prior to directing discharge to them. If flow velocities cause erosion within these channels, then the channel should be re-stabilized; if necessary, a stone lining or other stabilizing measure should be used.
- Bucketed water should be discharged in a stable manner to the sediment removal area. A splash pad of riprap underlain with geotextile may be necessary to prevent scouring of the soil in the basin.
- Dewatering during periods of intense, heavy rain should be avoided.

*Sediment Removal:*

- There are a number of methods for settling or filtering sediment that a contractor may use. Typical measures include

temporary basins or sediment traps, and manufactured fabric bags designed for filtering pumped discharges.

- Flow to the sediment removal structure must not exceed the structure's volume capacity or the structure's capacity to settle and filter flow.
- Sediment removal structures should discharge wherever possible to a well-vegetated buffer through sheet flow and should maximize the distance to the nearest water resources and minimizing the slope of the buffer area.

*Temporary Basin Designs:*

Temporary basin designs include but are not limited to:

- An enclosure of Jersey Barriers lined with geotextile fabric.
- A temporary enclosure constructed with hay bales, silt fence, or both. Erosion control mix also may be incorporated with silt fence or hay bales. Silt fence must be supported to prevent it from collapsing under the weight of impounded water.
- Chambered settling system fabricated of concrete or steel and designed for sediment removal.
- Excavated or bermed sedimentation trap. See the description of SEDIMENT TRAP in this manual.
- A sediment basin (including temporarily modified stormwater detention ponds), if designed in accordance with the description of SEDIMENT BASIN in this manual.

*Manufactured Devices:*

- Water from construction operations may be discharged to a manufactured filter structure specifically designed for sediment removal, such as a manufactured silt "bag" or other similar product.

*Discharges:*

- Water that is visibly clear of sediment, and has not come into contact with other contaminants, may be directly discharged into well-vegetated buffered areas with less than 2% slope, as long as a method is used to spread flow into sheet flow as it enters the buffer.
- Never discharge to areas that are bare or newly vegetated.
- The discharge should be stopped immediately if the receiving area is showing any sign of instability or erosion.

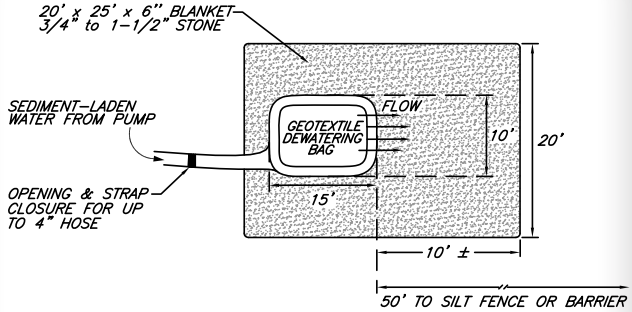


**PLANVIEW**

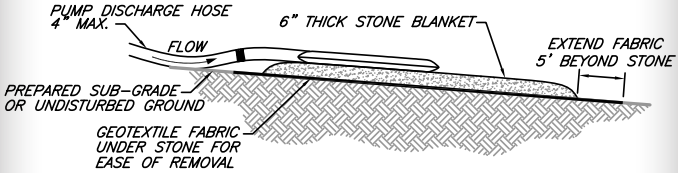


**PROFILE**

NOTES:

1. GEOTEXTILE BAG MATERIAL BASED ON PARTICLE SIZE IN PUMPED WATER, I.E., FOR COARSE PARTICLES A WOVEN MATERIAL; FOR SILTS/CLAYS A NON-WOVEN MATERIAL.
2. DO NOT OVER PRESSURIZE BAG OR USE BEYOND CAPACITY.
3. LOCATE DISCHARGE SITE ON FLAT UPLAND AREAS AS FAR AWAY AS POSSIBLE FROM STREAMS, WETLANDS, OTHER RESOURCES AND POINTS OF CONCENTRATED FLOW.
4. DOWNGRADIENT FROM RECEIVING AREA MUST BE WELL VEGETATED OR OTHERWISE STABLE FROM EROSION, E.G., FOREST FLOOR OR COARSE GRAVEL/STONE.
5. DISCHARGE LOCATION SHALL MEET ALL REGULATORY SETBACKS FROM WETLANDS AND OTHER WATER COURSES.

**GEOTEXTILE DEWATERING BAG**

ADAPTED FROM MAINE EROSION AND SEDIMENT CONTROL BMP MANUAL 2003

# FLOCCULANTS

## General Description

Flocculants (or coagulants) are natural materials or chemicals that cause colloidal particles (clay) to coagulate. The coagulated particles group together to form flocs, which settle out of detained stormwater.

Flocculants can be used in conjunction with sediment basins and sediment traps to remove suspended clay and fine silt particles from stormwater runoff prior to discharge. Use of flocculants improves the ability of these settling facilities to remove finer particles than would be removed otherwise and can increase the percentage of fines removed during the detention period.

**Flocculants should only be used upon approval by NHDES.**

## Considerations

Fine silts and clays are difficult to remove with conventional settling techniques such as sediment traps or basins. Colloidal particles in particular can remain in suspension indefinitely. When these soil materials are present in significant quantities, other measures will need to be considered to prevent impacts to receiving waters.

If a construction site is characterized by soils with significant amounts of fine silts and clays, it is particularly critical to prevent erosion of these soils in the first place, because of the difficulty in removing fine and colloidal particles from suspension.

There is a variety of flocculant materials available. Any product selected for use must be non-toxic and safe for both human and aquatic life and should not increase Biochemical Oxygen Demand (BOD) in the downstream receiving waters.

The use of flocculants must consider the following:

- Selection of an appropriate flocculant is highly dependent on the soil particle type and concentration.
- Flocculants require specific dosing rates that must be developed on a site-specific basis.

- Flocculants must be thoroughly mixed with the stormwater being treated.
- Settling basins must have sufficient volume and flow capacity to provide the necessary detention time for settling.
- When flocculants are used, the discharge must be carefully monitored to ensure that the chemical is adequately removed by settling.
- Flocculated material must be periodically removed to maintain system capacity, and upon completion of the project unless otherwise approved by NHDES.

For these reasons, flocculants are typically only used in special circumstances, and should be used under the direction of qualified professionals, and according to NHDES regulations.

## Maintenance Requirements

Site-specific maintenance requirements applicable to the use of flocculants should be determined in coordination with NHDES staff at the time that flocculants are reviewed and approved for use on a project.

## Specifications

- Sites should be stabilized as soon as possible using conventional measures to minimize the need to use flocculants.
- Flocculants should not be applied directly to or within 100 feet of any surface water unless specifically approved by the NHDES in writing.
- Flocculants should not be used unless the person requesting approval of such use demonstrates that due to the presence of on-site clay colloidal particles, other erosion control measures, alone or in combination, will not be sufficient to prevent turbidity violations and sedimentation in downstream receiving waters. Turbidity violations are described in Env-Wq 1703.11.
- Flocculants should only be used in strict accordance with the procedures and materials specifications outlined in the NH Alteration of Terrain (AoT) regulations (Env-Wq 1506.12).